PART NUMBER 148666, REV. M (04/20)

OPERATOR MANUAL

IMPORTANT INFORMATION, KEEP FOR OPERATOR

1055 Mendell Davis Drive, Jackson, MS 39272
888-994-7636, fax 888-864-7636
unifiedbrands.net

THIS MANUAL MUST BE RETAINED FOR FUTURE REFERENCE. READ, UNDERSTAND AND FOLLOW THE INSTRUCTIONS AND WARNINGS CONTAINED IN THIS MANUAL.

FOR YOUR SAFETY Do not store or use gasoline or other flammable vapors and liquids in the vicinity of this or any other appliance.

WARNING Improper installation, adjustment, alteration, service or maintenance can cause property damage, injury or death. Read the installation, operating and maintenance instructions thoroughly before installing or servicing this equipment.

NOTIFY CARRIER OF DAMAGE AT ONCE It is the responsibility of the consignee to inspect the container upon receipt of same and to determine the possibility of any damage, including concealed damage. Unified Brands suggests that if you are suspicious of damage to make a notation on the delivery receipt. It will be the responsibility of the consignee to file a claim with the carrier. We recommend that you do so at once.

Manufacture Service/Questions 888-994-7636.

This manual provides information for:

HYPERSTEAM™ ATMOSPHERIC CONVECTION STEAMER

MODELS HY-3E, (2)HY-3E, HY-5E & (2)HY-5E

REFERENCES

UNDERWRITERS LABORATORIES, INC.
333 Pfingsten Road
Northbrook, Illinois 60062

NFPA – NATIONAL FIRE PROTECTION ASSOCIATION
1 Batterymarch Park
Quincy, Massachusetts 02169

NSF INTERNATIONAL
789 N. Dixboro Rd.
P.O. Box 130140
Ann Arbor, Michigan 48113

ANSI – AMERICAN NATIONAL STANDARDS INSTITUTE
1899 L Street, NW, 11th Floor
Washington, DC 20036

CSA INTERNATIONAL
178 Rexdale Blvd.
Toronto, ON
Canada M9W1R3

ICC – INTERNATIONAL CODE COUNCIL
500 New Jersey Avenue, NW
6th Floor, Washington, DC 20001

EQUIPMENT DESCRIPTION

Your Groen HY-3E or HY-5E HyPerSteam Convection Steamer is designed to give years of service. It has a stainless steel cavity (cooking chamber) served by an independent atmospheric steam generator which is electrically heated. A powerful blower circulates the steam in the cavity to increase heating efficiency.

The cavity holds up to three (HY-3E) or five (HY-5E) standard steam table pans. An 18 gauge stainless steel case encloses the cavity, the steam generator and the control compartment that houses electrical components. Door hinges are reversible (the door may be set to open from the left or right). Operating Controls are on the front panel.

Model HY-3E steamers and HY-5E steamers are equipped with fully electronic controls and a button activated, pre-programmed DELIME cycle. These units are readily identified by their unique control panels, with touch pad controls, and the distinctive symbol for steam integrated into the panel.

Both units are distinguished by the addition of a “fuse box” which allows the operator to change fuses without removing panels.

The drain system on all models includes a spray condenser, which helps keep steam from escaping from the chamber and cools drain water.

INSPECTION & UNPACKING

CAUTION: SHIPPING STRAPS ARE UNDER TENSION AND CAN SNAP BACK WHEN CUT. TAKE CARE TO AVOID PERSONAL INJURY OR DAMAGE TO THE UNIT BY STAPLES LEFT IN THE WALLS OF THE CARTON.

CAUTION: THE HY-5E WEIGHS 230 POUNDS (104 KG). THE THE HY-3E WEIGHS 180 POUNDS (82 KG). YOU SHOULD GET HELP AS NEEDED TO LIFT THIS WEIGHT SAFELY.

The HY-3E or HY- 5E will be delivered completely assembled in a heavy crate attached to a skid. On receipt, inspect the crate carefully for exterior damage.

Carefully cut the straps around the crate and detach the crate from the skid. Be careful to avoid personal injury or equipment damage from staples which might be left in the crating.

Write down the model number, serial number and installation date. Keep this information for reference. Space for these entries is provided at the top of the Service Log in the back of this manual.

When starting installation, lift the unit straight up off the skid. Check packing materials to make sure loose parts such as the condensate drip tray are not discarded with the packing material.

Information contained in this document is known to be current and accurate at the time of printing/creation. Unified Brands recommends referencing our product line websites, unifiedbrands.net, for the most updated product information and specifications. © 2019 Unified Brands. All Rights Reserved. Unified Brands is a wholly-owned subsidiary of Dover Corporation.

IMPORTANT - READ FIRST - IMPORTANT

WARNING: THE UNIT MUST BE INSTALLED BY PERSONNEL QUALIFIED TO WORK WITH ELECTRICITY AND PLUMBING. IMPROPER INSTALLATION CAN CAUSE INJURY TO PERSONNEL AND/OR DAMAGE TO THE EQUIPMENT. THE UNIT MUST BE INSTALLED IN ACCORDANCE WITH APPLICABLE CODES.

CAUTION: SHIPPING STRAPS ARE UNDER TENSION AND CAN SNAP BACK WHEN CUT.

CAUTION: DO NOT INSTALL THE UNIT IN ANY WAY WHICH WILL BLOCK THE RIGHT SIDE VENTS, OR WITHIN 12 INCHES OF A HEAT SOURCE SUCH AS A BRAISING PAN, DEEP FRYER, CHARBROILER OR KETTLE.

CAUTION: LEVEL THE UNIT FRONT TO BACK, OR PITCH IT SLIGHTLY TO THE REAR, TO AVOID DRAINAGE PROBLEMS.

WARNING: TO AVOID DAMAGE OR INJURY, FOLLOW THE WIRING DIAGRAM EXACTLY WHEN CONNECTING A UNIT.

CAUTION: DO NOT USE PLASTIC PIPE. DRAIN MUST BE RATED FOR BOILING WATER.

WARNING: DO NOT CONNECT THE DRAIN DIRECTLY TO A BUILDING DRAIN.

WARNING: BLOCKING THE DRAIN IS HAZARDOUS.

IMPORTANT: IMPROPER DRAIN CONNECTION WILL VOID WARRANTY.

IMPORTANT: DO NOT ALLOW ANY WATER TRAPS IN THE DRAIN LINE. A TRAP CAN CAUSE PRESSURE TO BUILD UP INSIDE THE CAVITY DURING STEAMING, WHICH WILL MAKE THE DOOR GASKET LEAK.

WARNING: WHEN YOU OPEN THE DOOR, STAY AWAY FROM STEAM COMING OUT OF THE UNIT. STEAM CAN CAUSE BURNS.

WARNING: BEFORE CLEANING THE OUTSIDE OF THE STEAMER, DISCONNECT THE ELECTRIC POWER SUPPLY. KEEP WATER AND CLEANING SOLUTIONS OUT OF CONTROLS AND ELECTRICAL COMPONENTS. NEVER HOSE OR STEAM CLEAN ANY PART OF THE UNIT.

WARNING: ALLOW COOKING CHAMBER TO COOL BEFORE CLEANING.

WARNING: CAREFULLY READ THE WARNINGS AND FOLLOW THE DIRECTIONS ON THE LABEL OF EACH CLEANING AGENT. USE SAFETY GLASSES AND RUBBER GLOVES AS RECOMMENDED BY DE-LIMING AGENT MANUFACTURER.

WARNING: DO NOT MIX DE-LIMING AGENTS (ACID) AND DE-GREASERS (ALKALI).

WARNING: DO NOT PUT HANDS OR TOOLS INTO THE COOKING CHAMBER UNTIL THE FAN HAS STOPPED TURNING.

WARNING: DO NOT OPERATE THE UNIT UNLESS THE REMOVABLE LEFT AND RIGHT SIDE PANELS HAVE BEEN RETURNED TO THEIR PROPER LOCATIONS.

NOTICE: DO NOT USE A CLEANING OR DE-LIMING AGENT THAT CONTAINS ANY SULFAMIC ACID OR ANY CHLORIDE, INCLUDING HYDROCHLORIC ACID. IF THE CHLORIDE CONTENT OF ANY PRODUCT IS UNCLEAR, CONSULT THE MANUFACTURER.

NOTICE: DO NOT USE ANY DE-GREASER THAT CONTAINS POTASSIUM HYDROXIDE OR SODIUM HYDROXIDE OR THAT IS ALKALINE.

WARNING: USE OF ANY REPLACEMENT PARTS OTHER THAN THOSE SUPPLIED BY GROEN OR THEIR AUTHORIZED DISTRIBUTOR VOIDS ALL WARRANTIES AND CAN RESULT IN BODILY INJURY TO THE OPERATOR AND DAMAGE THE EQUIPMENT. SERVICE BY OTHER THAN FACTORY AUTHORIZED PERSONNEL WILL VOID ALL WARRANTIES.

WARNING: HIGH VOLTAGE EXISTS INSIDE CONTROL COMPARTMENTS. DISCONNECT FROM BRANCH BEFORE SERVICING. FAILURE TO DO SO CAN RESULT IN SERIOUS INJURY OR DEATH.

INSTALLATION

WARNING: THE UNIT MUST BE INSTALLED BY PERSONNEL WHO ARE QUALIFIED TO WORK WITH GAS, ELECTRICITY AND PLUMBING. IMPROPER INSTALLATION CAN CAUSE INJURY TO PERSONNEL AND/OR DAMAGE TO THE EQUIPMENT. THE UNIT MUST BE INSTALLED IN ACCORDANCE WITH APPLICABLE CODES. THE UNIT MUST BE INSTALLED BY A LICENSED PLUMBER OR GAS FITTER WHEN INSTALLED WITHIN THE COMMONWEALTH OF MASSACHUSETTS.

CAUTION: DO NOT INSTALL THE UNIT WITH THE RIGHT OR LEFT SIDE VENTS BLOCKED OR WITHIN 12 INCHES OF A HEAT SOURCE (SUCH AS A BRAISING PAN, DEEP FRYER, CHAR BROILER OR KETTLE). TO AVOID DRAINAGE PROBLEMS, LEVEL THE UNIT FRONT TO BACK.

CAUTION: EACH UNIT MUST HAVE A SEPARATE GROUND WIRE FOR SAFE OPERATION.

WARNING: TO AVOID DAMAGE OR PERSONAL INJURY, FOLLOW THE ELECTRICAL SCHEMATIC EXACTLY WHEN CONNECTING THE UNIT.

WARNING: DO NOT CONNECT THE DRAIN DIRECTLY TO A BUILDING DRAIN. BLOCKING THE DRAIN IS HAZARDOUS.

CAUTION: DO NOT USE PLASTIC PIPE. DRAIN MUST BE RATED FOR VERY HOT WATER.

ELECTRICAL SUPPLY CONNECTION

1. Panel Removal: Open the wiring and control panel by removing the screws on the right side panel. Slide the panel forward, and set it aside.
2. Supply Voltage: The unit must be operated at the rated nameplate voltage.
3. Phase Selection: Refer to heater schematics for wiring information.
4. Terminal Block: The terminal block for incoming power is located at the back of the control compartment. The ground terminal is located in the wiring compartment near the terminal block.
5. Supply Wire: To determine the type of wire you need for the power supply, find the operating voltage and number of phases on the unit data plate. Refer to the table below or to the label on the unit's back for correct wire size and temperature rating. The equipment grounding wire must comply with the National Electrical Code (NEC) requirements. The schematic on the inside of the unit's right side cover gives directions for proper connection of the terminal block jumpers. The specified wire must be used, or the unit will not meet Underwriters Laboratories and NEC requirements. The knockout hole is sized for a ¾ inch conduit fitting on the HY-3E and for a 1 inch conduit fitting on the HY-5E.

FIELD WIRING TABLE - USE COPPER WIRE ONLY - INSULATION RATING THHN (90ºC)

VOLTAGE (60 Hz Only)	KW		Field Wiring		Rated Current Demand	
MODEL	HY-3E	HY-5E	HY-3E	HY-5E	HY-3E	HY-5E
480 3 PHASE	8.1	15.5	14 AWG	12 AWG	10 Amps	18.6 Amps
240 1 PHASE	8.1	15.5	8 AWG	4 AWG	33 Amps	64.6 Amps
240 3 PHASE	8.1	15.5	10 AWG	8 AWG	20 Amps	37.3 Amps
208 1 PHASE	8.1	15.5	8 AWG	4 AWG	39 Amps	74.5 Amps
208 3 PHASE	8.1	15.5	10 AWG	6 AWG	23 Amps	43 Amps

6. Branch Circuit Protection: Each Steamer, including individual units of stacked models, should have its own branch circuit protection and ground wire. Current and power demands for each unit are as shown above.

WATER CONNECTION(S)

Install a check valve to prevent back flow in the incoming cold water line, as required by local plumbing codes. Water pressure in the line should be between 30 and 60 PSIG and must deliver a flow rate of 1.5 to 3.0 gallons per minute. If pressure is above 60 PSIG, a pressure regulator will be needed.

A ¾ inch female NH connector (garden hose type) is used to attach the water supply to the inlet valve. Minimum inside diameter of the water feed line is ½ inch. Use a washer in the hose connection. Do not allow the connection to leak, no matter how slowly. The dual water standard connection, treated (softened) water goes to the right (seen from the rear of the unit), and untreated water to the left. Connections for both are made as shown below.

DRAIN CONNECTION

Level the steamer front to back, or pitch it slightly to the rear (maximum ¼ inch) by adjusting the bullet feet on the stand or cabinet base.

A two inch (50mm) [HY-5E] or 1½ inch (38 mm) [HY-3E] ID hose should be attached to the drain pipe supplied.

There must be a free air gap between the end of the hose and the building drain. The free air gap should be as close as possible to the unit drain. There must also be no other elbows or other restrictions between the unit drain and the two inch free air gap.

Install the drain line with a constant downward pitch. **IMPORTANT**: Do not allow water traps in the drain line. A trap can cause pressure build-up in the cavity, which may cause the door gasket to leak.

FACTORY STACKED UNITS

WARNING: DO NOT CONNECT THE UNIT DRAIN DIRECTLY TO THE BUILDING DRAIN.

CAUTION: DO NOT USE PLASTIC PIPE. DRAIN MUST BE RATED FOR VERY HOT WATER.

This section is applicable only if you are installing factory-stacked units. If you plan to stack steamers yourself, whether purchasing a new one for stacking or a kit to stack two units you already own, you will require OM-HY-3E(S), RETROFIT SUPPLEMENT (Part Number 121014). These instructions are also valid for stacking HY-5E steamers.

Installing stacked steamers is similar to installing a single unit. The steamers are stacked and assembled at the factory and delivered with the water connections and drain hoses required for a single point connection.

1. Water Connection: The same water supply connection is used for both units. At the water level inlet valve two 3/4" female NH connectors (garden hose type) are used for the water supply. Treated water (softened) is connected to the right valve fitting (looking from the rear of the unit) and untreated water to the left fitting.
2. Electrical Supply Connection: Separate, individual electrical connections will be required for each steamer in the stack. Each Steamer must have its own branch circuit protection.
3. Drain Connection: Steamers must be leveled front to back, or pitched to the rear (maximum 1/4 inch) by adjusting the bullet feet on the cabinet or stand base.

   For HY-3E a 1½ inch and for HY-5E a 2 inch ID hose may be attached to the unit drain. It must be rated for boiling water.

   Ensure that there is a free air gap between the end of the unit drain and the building drain. This gap should be as close as possible to the unit drain. Do not allow elbows or restrictions between the unit and the free air gap.

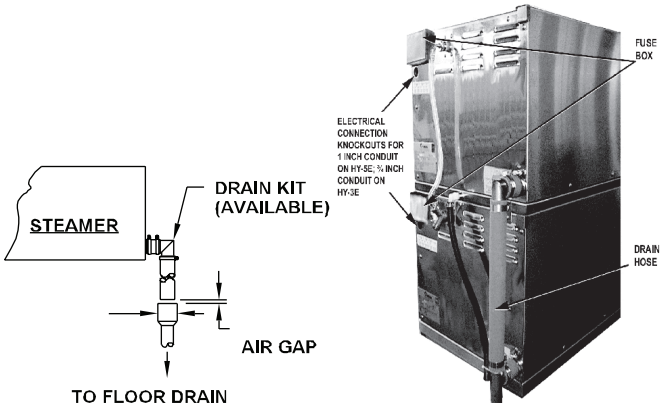

Rear view of (2) HY-5E. NOTE: Some drain parts (elbow, clamps) for single models are packed inside the steamer cavity. Stacked units are factory assembled. Installation is the same for stacked HY-5E and HY-3E units.

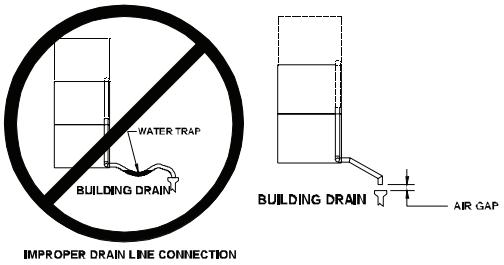

Proper Drain Line Connection. Drain Line must have a constant downward pitch of at least 6 mm (¼") per foot. Connection is 1½" for HY-3E, 2" for HY-5E. (3)HY-3E shown.

COUNTER-MOUNTED UNITS

This section is applicable if the steamer will be mounted to a counter. All four edges of the bottom of the steamer must be sealed with RTV to the counter if 4 inch legs are not used. Counter must be made of a noncombustible material such as metal or tile.

OPERATION

WARNING: ANY POTENTIAL USER OF THE EQUIPMENT SHOULD BE TRAINED IN SAFE AND CORRECT OPERATING PROCEDURES.

WARNING: WHEN YOU OPEN THE DOOR, STAY AWAY FROM THE STEAM COMING OUT OF THE UNIT. THE STEAM CAN CAUSE BURNS.

CONTROLS

Operator controls are on the front right of the unit. The control panel has the following touch pads and indicator lights:

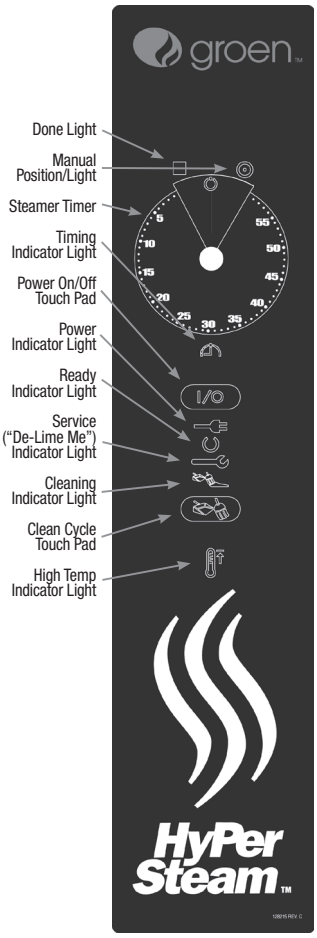

The timer is used in three ways:

1. The ON/OFF touch pad gets the HyPerSteam ready for use, or shuts it off.
2. The READY indicator light shows that the steam generator is at standby temperature and the cavity is hot enough to begin steaming.
3. When one probe is covered with lime scale or fails, the DELIME light flashes briefly every few seconds, but the unit will continue to operate. Delime the unit as soon as possible. The DELIME light will flash until power is removed from the unit, or the unit goes through a clean cycle.
4. If the problem continues, both probes may fail. Then the steamer stops working, and the SERVICE light is lit. If DELIMING/CLEANING does not correct, turn off the power and contact an Authorized Groen Service Representative for repair.
5. The DELIME indicator light is lit when the unit is operating in the cleaning mode.
6. The HI TEMP indicator light comes on when the steam generator is too hot. The unit will automatically shut off, and cannot be turned on again until the steam generator cools and the HI TEMP indicator light goes out.

7. The TIMING indicator light stays on when the timer is running.
8. The CLEAN touch pad is used to start the automatic 50 minute deliming cycle.
9. The timer is used in three ways:
   a. In the OFF position the steam generator stays at a low boil or "holding" temperature.
   b. When a cook time is set, the unit steams until the timer runs down to OFF. At that time steaming stops, a red light comes on and a beeper sounds.
   c. With the timer turned to the ON position, the unit steams continuously. The green light stays lit. The steamer will not time down.

OPERATING PROCEDURE

1. Press the ON switch/pad for the steamer. The steam generator will fill, and heat until the READY light comes on. (About 10 minutes.)
2. Load food into pans in uniform layers. Pans should be filled to about the same levels, and be even on top.
3. Open the door and slide the pans onto the supports. If you will only be steaming one pan, put it in the middle position.
4. Close the door. With the READY indicator lit, take one of the following steps:
   - If you want to steam the food for a certain length of time, set the timer for that period. The timer will automatically run the steamer for the set time and then turn it off. A red light will come on and a beeper will sound. Steam production stops.
   - To steam continuously, turn the timer to the manual ON position. A green light will come on. The unit will continue steaming until you stop it by turning the timer to OFF. When steaming continuously YOU MUST CONTROL STEAMING TIME.
5. Open the door. Remove the pans from the steamer, using hot pads or oven mitts to protect your hands from the hot pans.
6. To shut down the unit, press the ON/OFF touch pad to OFF. The steam generator will automatically drain.

WATER QUALITY & TREATMENT

REDUCE SCALE PROBLEMS BY USING AND MAINTAINING A WATER SOFTENER FOR YOUR STEAMER!

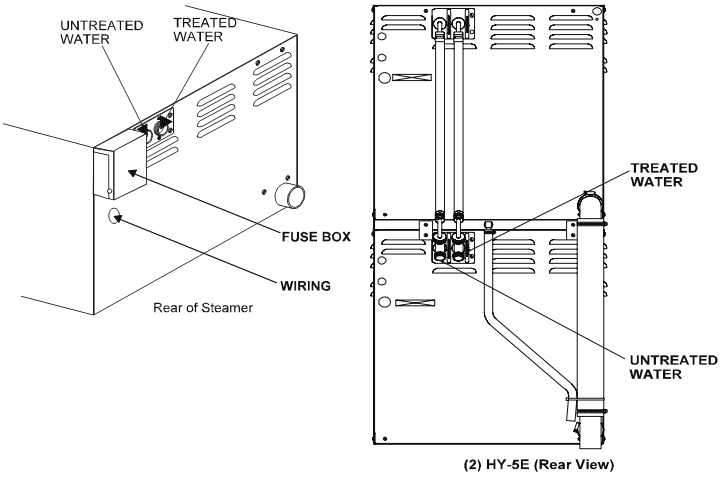

(2) HY-5E (Rear View)

Models built since 1998 have a fuse box mounted on the rear.

On both the HY-3E and HY-5E, the dual water connections are side by side on the rear of the unit. When seen from from the back of the unit, the treated (softened) water intake is on the right.

It is essential that the steam generator be supplied with water that will not form scale at an unacceptable rate. The boiler was engineered to minimize scale, but its formation depends on water hardness and how much the unit is used.

In some areas of the United States the water is low enough in mineral content to avoid scale build-up. However, most water supplies carry heavy loads of minerals. This will form scale in the steam generator, reduce its steam output, and possibly cause premature component failure.

Your water utility or local water quality dealer can tell you about the minerals in your water. The water going to the steam generator should have:

1. Between 1 and 30 ppm total dissolved solids (TDS)
2. A pH (acidity rating) of 7.0 - 8.0
3. Total alkalinity less than 120 ppm
4. Silica less than 13 ppm
5. Chlorides less than 30 ppm
6. Sulfates less than 40 ppm
7. Chlorine less than 10 ppm

Please follow these simple precautions:

1. Do not rely on unproven water treatment equipment which is sold for scale prevention or scale removal. They frequently don't work. The best way to prevent scale is to supply the purest possible water.
2. If your water contains scale-forming minerals, as most water does, use a well maintained water treatment system. Whether an exchangeable softener cartridge or a regenerating system is chosen, a regular exchange system is essential.
3. Installing a water meter on supply line to the steamer will provide an accurate gauge of water use, and will help determine when to exchange cartridges or regenerate the softener. Using treated water will provide longer generator life, higher steam capacity, and reduce maintenance requirements.
4. If you notice a slowdown in steam production, check the steam generator for scale build-up. Heavy scale reduces the unit's ability to boil water, and can even cause heating elements in the steam generator to overheat and burn out.
5. Steamers are available with two separate water intakes:

   one for the steam generator (treated water)

   one for the spray condenser (untreated water).

   The steam generator only uses 14 to 31% of a steamer's water. Since water treatment systems are typically sized by total GPH (gallons per hour), the second intake could reduce treatment requirements by up to 80%, resulting in significant savings.

CLEANING

WARNING: DISCONNECT THE POWER SUPPLY BEFORE CLEANING THE OUTSIDE OF THE STEAMER. KEEP WATER AND CLEANING SOLUTIONS OUT OF CONTROLS AND ELECTRICAL COMPONENTS. NEVER HOSE OR STEAM CLEAN ANY PART OF THE UNIT. DON'T MIX DE-LIMING AGENTS (ACID) WITH DE-GREASERS (ALKALI) ANYWHERE IN THE UNIT. AVOID CONTACT WITH ANY CLEANERS, DE-LIMING AGENT OR DE-GREASER AS RECOMMENDED BY THE SUPPLIER. MANY ARE HARMFUL. READ THE WARNINGS AND FOLLOW THE DIRECTIONS! EVEN WHEN THE UNIT HAS BEEN SHUT OFF, DON'T PUT HANDS OR TOOLS INTO THE COOKING CHAMBER UNTIL THE FAN HAS STOPPED TURNING. DON'T OPERATE THE UNIT UNLESS THE TWO REMOVABLE INTERIOR PARTITIONS HAVE BEEN PUT BACK IN THEIR PROPER LOCATIONS. DON'T USE ANY CLEANING OR DELIMING AGENT THAT CONTAINS ANY SULFAMIC AGENT OR ANY CHLORIDE, INCLUDING HYDROCHLORIC ACID (HCL). TO CHECK FOR CHLORIDE CONTENT SEE ANY MATERIAL SAFETY DATA SHEETS PROVIDED BY THE CLEANING AGENT MANUFACTURER.

IMPORTANT: DO NOT USE ANY METAL MATERIAL (SUCH AS METAL SPONGES) OR METAL IMPLEMENT (SUCH AS A SPOON, SCRAPER OR WIRE BRUSH) THAT MIGHT SCRATCH THE SURFACE. SCRATCHES MAKE THE SURFACE HARD TO CLEAN AND PROVIDE PLACES FOR BACTERIA TO GROW. DO NOT USE STEEL WOOL, WHICH MAY LEAVE PARTICLES IMBEDDED IN THE SURFACE WHICH COULD EVENTUALLY CAUSE CORROSION AND PITTING.

CAUTION: NEVER LEAVE A CHLORINE SANITIZER IN CONTACT WITH STAINLESS STEEL SURFACES FOR LONGER THAN 30 MINUTES. LONGER CONTACT CAN CAUSE CORROSION.

To keep your HY-3E or HY-5E Steamer in proper working condition, use the following procedure to clean the unit. This regular cleaning will reduce the effort required to clean the steam generator and cavity.

SUGGESTED CLEANING SUPPLIES

1. Mild detergent
2. Stainless steel exterior cleaner such as Zepper®
3. Steam generator de-liming agent, such as Groen Delimer Descaler. A liquid de-liming agent will be easier to use than crystals or powders. See the warning about chlorides.
4. De-greaser
5. Cloth or sponge
6. Plastic wool or a brush with soft bristles
7. Spray bottle
8. Measuring cup
9. Nylon pad
10. Towels
11. Plastic disposable gloves
12. Funnel

PROCEDURE

1. **Outside**

   a. Prepare a warm solution of the mild detergent as instructed by the supplier. Wet a cloth with this solution and wring it out. Use the moist cloth to clean the outside of the unit. Do not allow freely running liquid to touch the controls, the control panel, any electrical part, or any open louver.

   b. To remove material which may be stuck to the unit, use plastic wool, a fiber brush, or a plastic or rubber scraper with a detergent solution.

   c. Stainless steel surfaces may be polished with a recognized stainless steel cleaner such as Zepper®.

2. **Steam Generator and Cooking Chamber**

   The steamer cavity and steam generator may be cleaned separately. Regular deliming, depending on your steamer usage and local water quality, must be done to enhance performance and prolong the life of your HyPerSteam™ convection steamer. Steamer must be turned off after every use to prevent lime scale buildup - do not run steamer continuously. When cleaning is scheduled, or the SERVICE light is on, follow the simple deliming instructions.

   NOTE: ALWAYS USE HOT PADS OR MITTS WHEN HANDLING HOT STEAMER PANELS OR RACKS. DON'T ALLOW DE-LIMING AGENTS TO MIX WITH DEGREASERS.

RECOMMENDED TOOLS & CLEANERS:

- Groen Delimer/Descaler (Part Number 114800). Do NOT use any product containing chlorides or sulfamic acid, including hydrochloric acid.
- Nylon scrub pad, cloth and/or sponge.

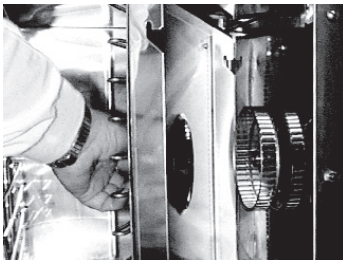

Once the cavity has cooled, reach in and remove the fan baffle partition by lifting it upward and drawing it toward the center of the cavity.

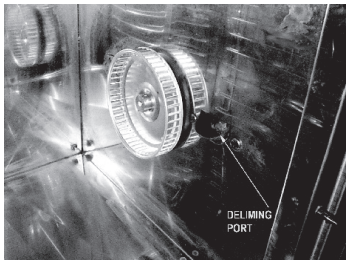

Pour two cups of Groen de-liming solution into the de-liming port.

DELIMING STEPS (USE TOUCH PAD)

STEP 1

Press ON/OFF to turn steamer off. Open door.

STEP 2

Let cavity cool for 5 minutes or longer. While cool, wipe out cavity. Close door.

STEP 3

Press and hold CLEAN while also turning steamer on by pressing ON/OFF, until only DELIME and POWER lights remain on (all lights will turn on, then off, except DELIME and POWER).

STEP 4

After 5 minutes, beeper will beep rapidly, signaling you to add Groen Delimer/Descaler. Door(s) must remain closed for entire delime cycle.

STEP 5

Pour 1 pint (2 cups) of delimer PER CAVITY into upper and /or lower deliming port(s) and then close port(s). Press CLEAN. Double-stacked unit cavities may be delimed together or seperately

STEP 6

Delime cycle will start, taking about 30 minutes. When delime cycle is complete, DELIME light will appear, DONE light will flash and beeper will beep.

STEP 7

Press ON/OFF to turn steamer off. Let cavity cool for 5 minutes or longer. Open door, wipe out inside of cavity and wipe door gasket. Close door.

STEP 8

To use steamer, press ON/OFF. When READY light appears, steamer is ready to use.

NOTES:

- If DELIME light flashes rapidly (5 times per second), press DELIME to restart delime cycle.
- If power outage occurs during deliming, delime cycle must be restarted. Press DELIME.
- For best performance, do not interrupt delime cycle. If delime cycle must be stopped, press ON/OFF to turn on. Set timer for 5 minutes. After beeper beeps, press ON/OFF to turn off. Let cavity cool for 5 minutes or longer, carefully open door(s) and wipe out cavity completely.

MAINTENANCE

NOTE: THE UNIT CONTAINS NO FUSES THAT SHOULD BE REPLACED BY THE OPERATOR.

HY-3E and HY-5E Steamers are designed for minimum maintenance, and no user adjustments should be necessary. Certain parts may need replacement after prolonged use. If there is a need for service, only Groen personnel or authorized Groen representatives should perform the work. Always supply water with a low mineral count that meets the standards outlined in the Water Conditioning section of this manual.

If steam or condensate is seen leaking from around the door, take the following steps:

1. Check the door gasket. Replace if it is cracked or split.
2. Inspect the cooking chamber drain to be sure it is not blocked.
3. Adjust the latch pin to allow for changes that might occur as the gasket ages.
   a. Loosen the lock nut at the base of the latch pin. Turn the latch pin ¼ turn clockwise, and re-tighten the lock nut.
   b. After adjustment, run the unit to test for further steam leakage.
   c. If there is still leakage, repeat the adjustment.
   d. Continue adjusting the pin clockwise until the door fits tightly enough to prevent leakage.

REPLACEMENT PARTS

To order parts, contact your Authorized Service Agent. Supply the model designation, serial number, part description, part number, quantity, and when applicable, voltage and phase.

CONTACT US

If you have questions pertaining to the content in this manual, contact Unified Brands at 888-994-7636.

TROUBLESHOOTING

This unit is designed to operate smoothly and efficiently if properly maintained. However, the following is a list of checks to make in the event of a problem. Wiring diagrams are found at the end of this manual. When in doubt, turn unit off and call for service at 888-994-7636. If an item on the check list is marked with (X), it means that the work should be done by an Authorized Service Agent.

SYMPTOM	WHO	WHAT TO CHECK X indicates items which must be performed by authorized technician.
Steam generator does not fill with water.	User	a. Is the ON switch depressed? b. Is the water supply connected? c. Is the water turned on? d. Check for low water pressure (less than 30 PSI or 210 kPa) OR low water flow (less than 5.7 liters (1.5 gallons) per minute. e. Is the screen at the water connection clogged? f. Has the steam generator been delimed?
No steam.	User	a. Is the ON switch depressed? b. Is the water supply connected? c. Is the water turned on? d. Are steamer doors open? e. Is the steam generator limed up?
Service light comes on after four minutes.	User	a. Is the water supply connected? b. Is the water turned on? c. Has the unit been delimed? (Refer to Cleaning Section)
Excessive steam escaping from rear of unit.	User	a. Is the water spray hose kinked or obstructed?
	Authorized Service Rep Only	b. Is the water spray solenoid connected? X c. Is the drain properly vented? X
High Limit Indicator Light is "ON."	Authorized Service Rep Only	Reset the high limit thermostat after checking the cause of high temperature and correcting it. (X) (See Service Section)

Parts List

ELECTRICAL ASSEMBLY

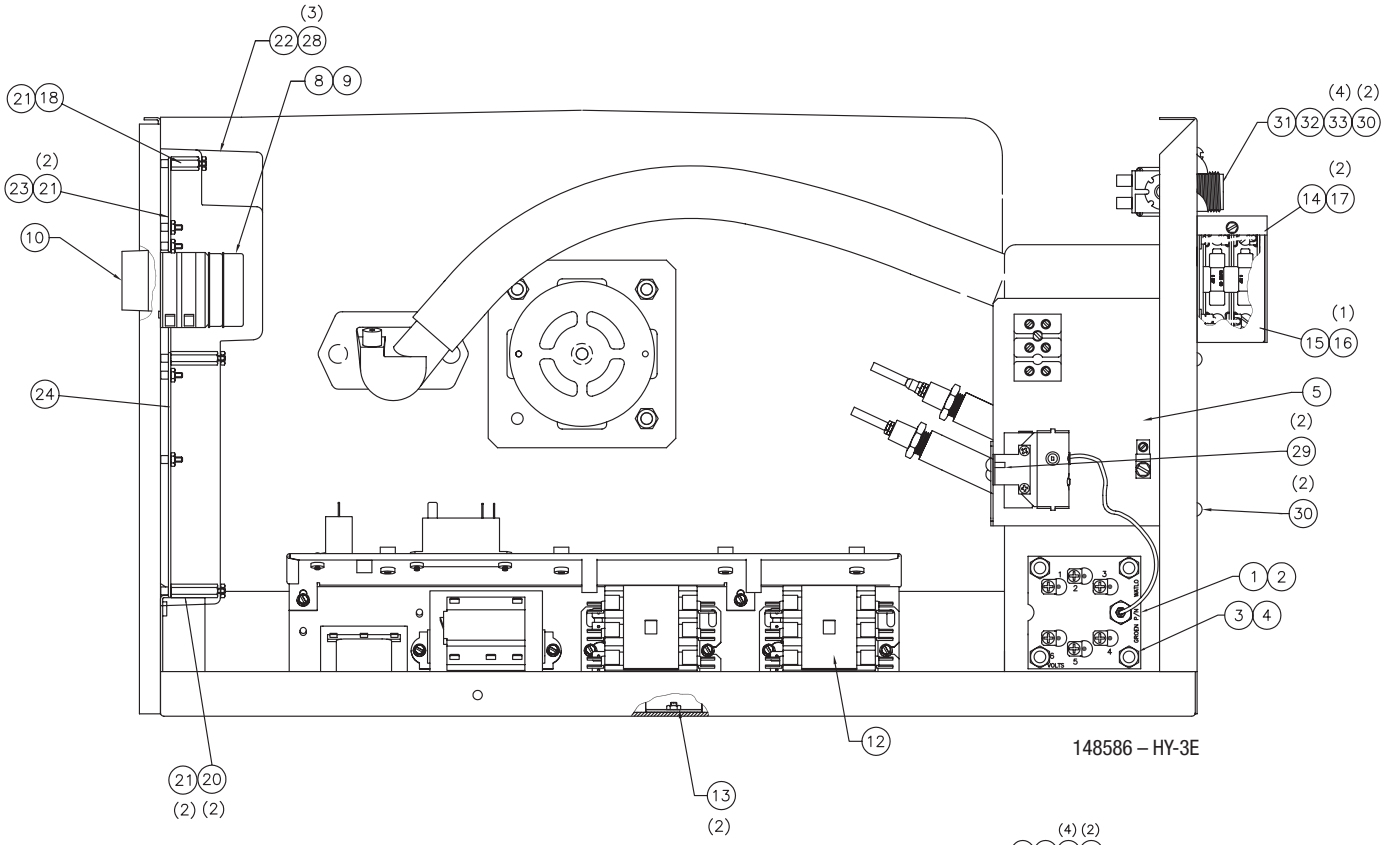

148586 – HY-3E

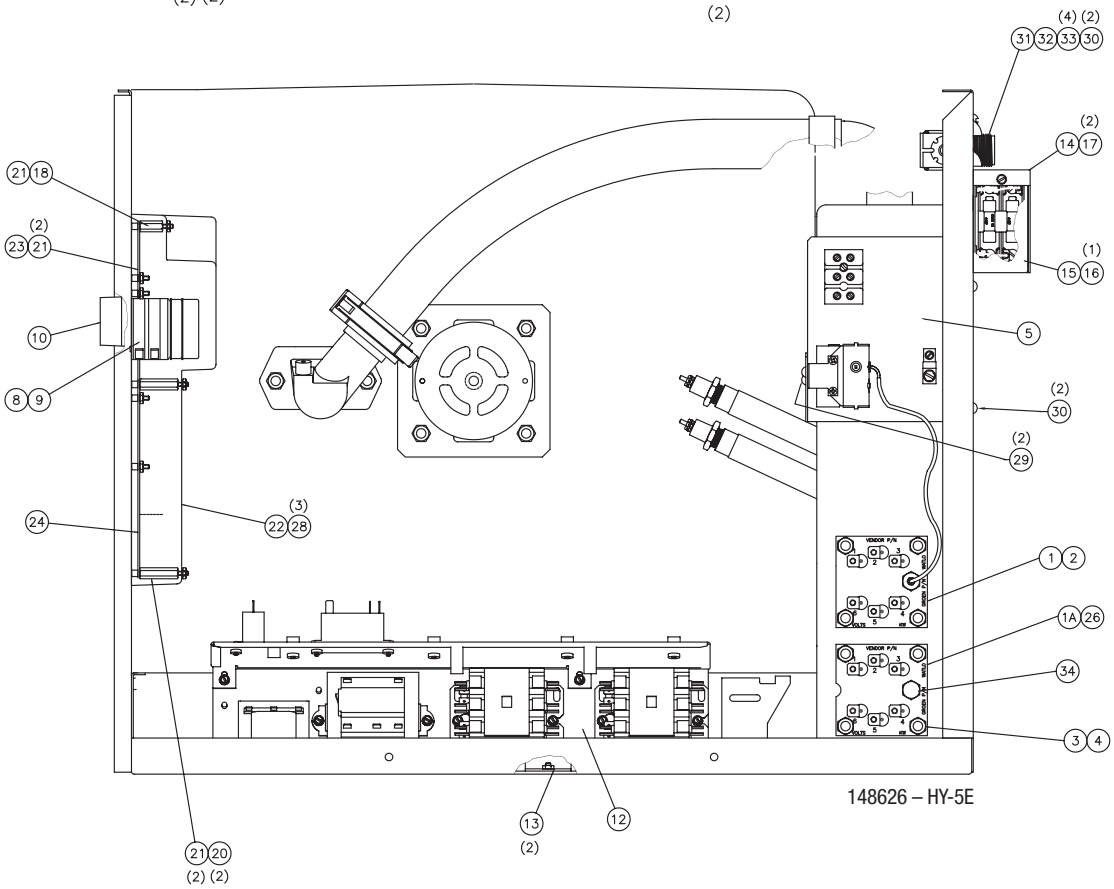

148626 – HY-5E

Parts List

Key	Description	Part #	HY-3E	HY-5E
1	ASSEMBLY, HEATER ELEMENT & T-STAT, 208V, 8KW	141846	X	X
1	ASSEMBLY, HEATER ELEMENT & T-STAT, 240V, 8KW	142146	X	X
1	ASSEMBLY, HEATER ELEMENT & T-STAT, 480V, 8KW	142148	X	X
1A	ASSEMBLY, HEATER ELEMENT, 208V, 8KW	141183		X
1A	ASSEMBLY, HEATER ELEMENT, 240V, 8KW	141184		X
1A	ASSEMBLY, HEATER ELEMENT, 480V, 8KW	141185		X
2	GASKET, HEATER	Z042366	X	X
3	NUT, HEX, 5/16-18	Z005602	X	X
4	WASHER, LOCK, 5/16	Z005656	X	X
5	ASSEMBLY, LINE CONNECTION PANEL	148587	X	X
-	HARNESS, CONTROL	148111	X	X
-	HARNESS, HEATER	148113	X	
-	HARNESS, HEATER	148115		X
-	HARNESS, POWER	148112	X	X
8	TIMER, STEAMER, 24VAC, 60HZ	Z096826	X	X
9	NUT, ROTARY SHAFT SEAL, 3/8-32	101145	X	X
10	KNOB, TIMER	123100	X	X
12	ASSY, CHASSIS, HY-3/5E	148574	X	X
13	NUT HEXAGON KEPS 10-32	Z071256	X	X
14	FUSE BLOCK COMPARTMENT ASSEMBLY	119848	X	X
15	COVER, FUSE BLOCK COMPARTMENT	119846	X	X
16	SCREW, HEX WSHR HD, #8-32, 1/4" LONG	Z074242	X	X
17	SCREW, HEX WSHR HD, 10-32, 3/8" LONG	Z069773	X	X
18	STANDOFF, 6-32, 1-1/4" LONG	119827	X	X
20	STANDOFF, 6-32, 3/4" LONG	119826	X	X
21	NUT, LOCK, NYLON INSERT, 6-32	119855	X	X
22	COVER, PANEL CONTROL	143255	X	X
23	LIGHT & TIMER PC BOARD ASSEMBLY	137233	X	X
24	STEAMER CONTROL BOARD ASSEMBLY	141082	X	X
-	HARNESS, JUMPER, VOLTAGE SELECT, 18GA	123124	X	X
-	HARNESS, TIMER MOTOR	123120	X	X
-	HARNESS, JUMPER, CONTROL BD TO RIBBON CONN	123122	X	X
28	NUT, HEX KEPS, 6-32	Z071289	X	X
29	SCREW, RND HD, SELF-TAP, 6-32, 3/8" LONG	Z012398	X	X
30	SCREW, TRS HD, 10-32, 3/8" LONG	Z004173	X	X
31	VALVE, WATER, SINGLE WAY	100934	X	X
32	PLATE, COVER, DOUBLE WATER INLET	101199	X	X
33	SCREW, TRS HD, 8-32, 3/8" LONG	Z005764	X	X
34	PLUG, PIPE, 1/4 NPT, HEX HD, 304SS	Z004145		X

Parts List

Key	Description	Part #	HY-3E	HY-5E
-	BRACKET, STEAM DEFLECTOR	118157	X	X
-	BRKT TUBE ASSY & "L" HY-5E	125950	X	X
-	CLAMP, HOSE, WORM DRIVE,	Z093482	X	X
-	CLAMP, HOSE, CONSTANT TENSION, CTB-16	127522	X	X
-	CLAMP, HOSE, CONSTANT TENSION, CTB-17	127523	X	
-	CLAMP, HOSE, CONSTANT TENSION, CTB-19	126095		X
-	CLAMP, HOSE, CONSTANT TENSION, CTB-24	127524		X
-	CLAMP, HOSE, CONSTANT TENSION, CTB-27	138457	X	
-	CLAMP, HOSE, CONSTANT TENSION, CTB-40	148307	X	
-	CLAMP, HOSE, CONSTANT TENSION, CTB-47	127526	X	X
-	CLAMP, HOSE, DOUBLE WIRE, DW-12	127662	X	X
-	CLAMP, HOSE, DOUBLE WIRE, DW-9.5	127527	X	X
-	CLAMP, HOSE, SINGLE WIRE, HC-38	126010		X
-	HOSE, REINFORCED RUBBER, BLACK, 3/8 ID, 31-1/4" LONG	125994		X
-	HOSE, REINFORCED RUBBER, BLACK, 3/8 ID, 26-1/2" LONG	Z096807	X	
-	HOSE, REINFORCED RUBBER, BLACK, 3/8 ID, 20" LONG	142261		X
-	HOSE, REINFORCED RUBBER, BLACK, 3/8 ID, 4" LONG	142271		X
-	HOSE, REINFORCED SILICONE, 1-1/2 ID, 2-1/2" LONG	122873	X	
-	HOSE, REINFORCED SILICONE, 2 ID, 3-1/2" LONG	125955		X
-	HOSE, REINFORCED PVC, CLEAR, 3/8" ID, 21" LONG	Z096773	X	
-	HOSE, SANTOPRENE, 3/4 ID, STEAM INLET, 11-1/2" LONG	Z088870	X	
-	HOSE, SANTOPRENE, 3/4 ID, STEAM INLET, 18-3/4" LONG	125954		X
-	HOSE, SANTOPRENE, 1-1/8 ID, STEAM INLET, 17" LONG	123867	X	
-	HOSE, SANTOPRENE, 1-1/2 ID, STEAM INLET, 18" LONG	126008		X
-	REDUCER, WATER FLOW (.055 ID)	112720	X	
-	REDUCER, WATER FLOW (.078 ID)	Z088877		X
-	SCREW TRS HD 10-32 X 3/8"	Z004173	X	X
-	ASSEBMLY, DRAIN TUBE, HY-3E	123115	X	
-	ASSEBMLY, DRAIN TUBE, HY-5E	125918		X
-	TEE, BARBED, 3/8 HOSE	138432		X

Parts List

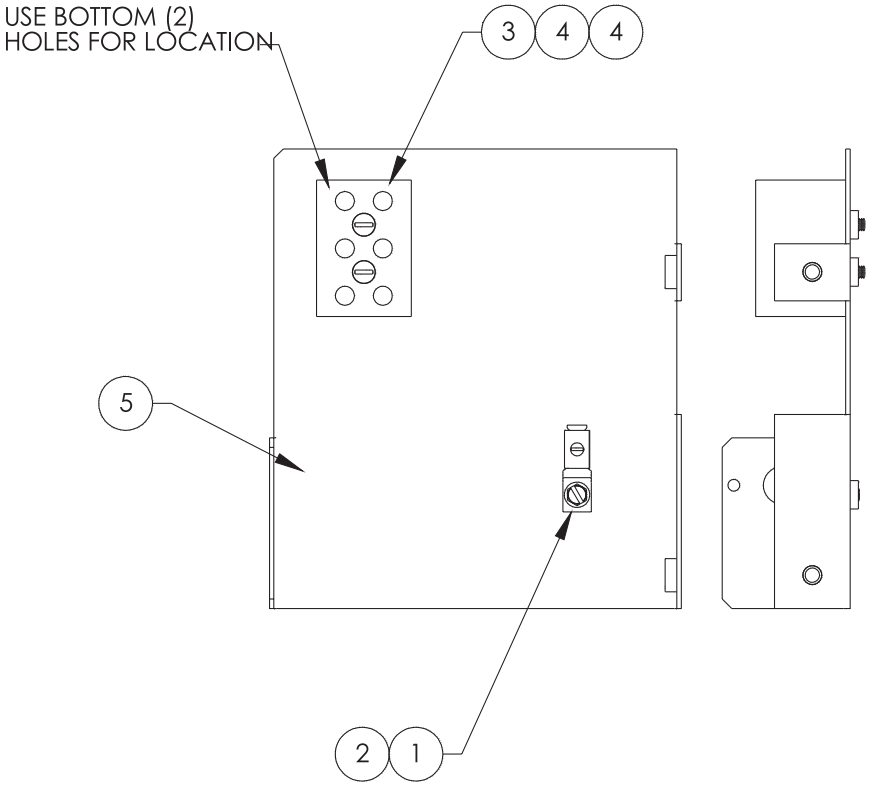

Key	Description	Part #	HY-3E	HY-5E
1	LUG, GROUND, 14-6 AWG	119829	X	X
2	SCREW, HEX, #8-32, 1/4" LONG	Z074242	X	X
3	TERMINAL BLOCK, 3-POLE	Z003888	X	X
4	SCREW, RND HEAD, #8-32, 1-1/4" LONG	Z005056	X	X
5	BRACKET, LINE CONNECTION	148622	X	X

Parts List

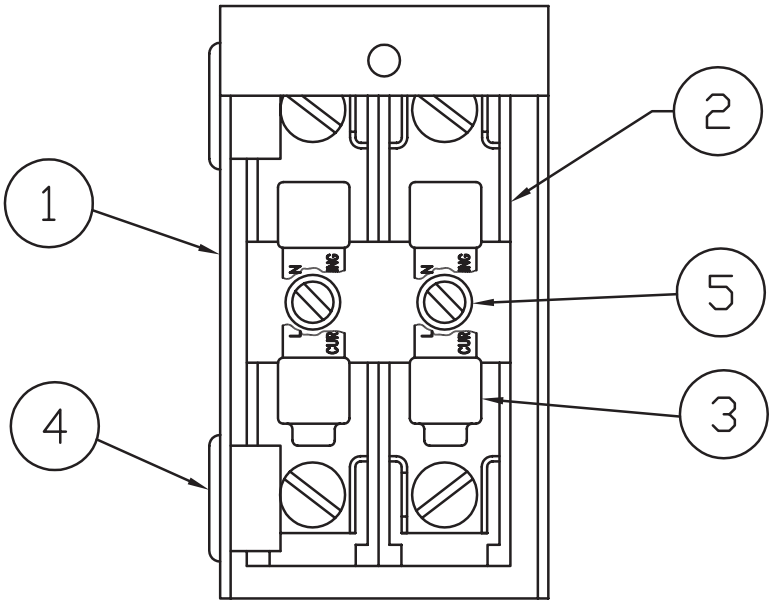

Key	Description	Part #	HY-3E	HY-5E
1	ASSEMBLY, ENCLOSURE, FUSE BLOCK	155686	X	X
2	FUSE BLOCK, 2 POLE	Z096809	X	X
3	FUSE, 6 AMP, 600 VOLT, CLASS CC	119823	X	X
4	BUSHING, SNAP, 1/2 ID, 5/8" LONG	Z009884	X	X
5	SCREW, MACHINE, RND HD, 8-32, 1/2" LONG	Z009696	X	X

Parts List

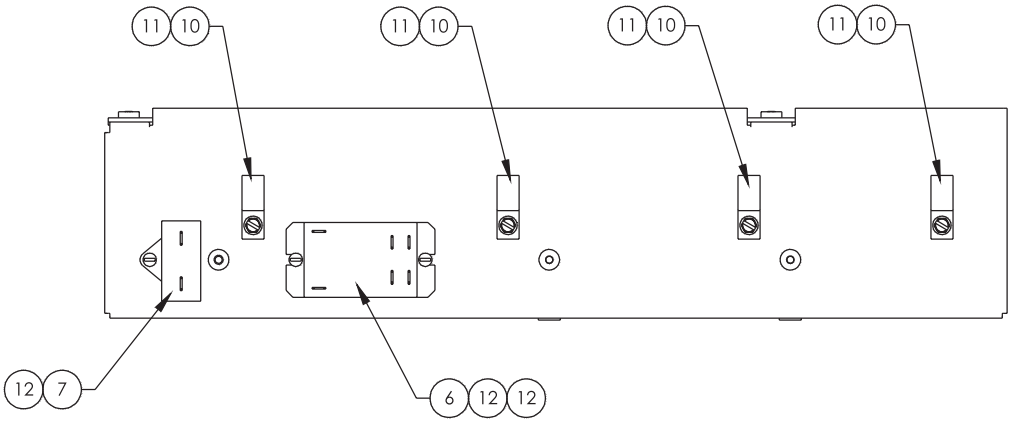

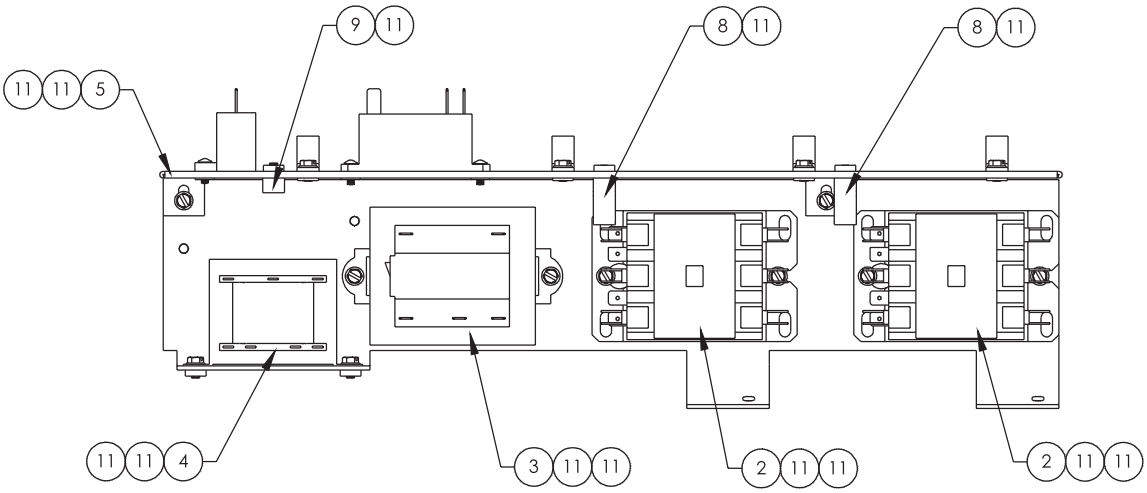

Key	Description	Part #	HY-3E	HY-5E
1	CHASSIS, ELECTRICAL	148572	X	X
2	CONTACTOR, 24VAC, 3-POLE, 30 FLA	148102	X	X
3	TRANSFORMER, 208V/240V:24V, 75VA	121716	X	X
4	TRANSFORMER, 115V/230V:24V, 30VA	119815	X	X
5	SHIELD, CHASSIS DRIP	148573	X	X
6	RELAY, 12 VDC	119813	X	X
7	CAPACITOR, FOIL, 3 MFD	Z096813	X	X
8	CLAMP, CABLE 3/4, WHC-750	119820	X	X
9	CLAMP, CABLE, 1/4, WHC-250	119818	X	X
10	CLAMP, CABLE, 1/2, WHC-500	119819	X	X
11	SCREW, HEX WSHR HD, 8-32, 1/4" LONG	Z074242	X	X
12	SCREW, MACHINE, PAN HD, 6-32, 3/8" LONG	Z009697	X	X
-	HARNESS, JUMPER, 18GA	123125	X	X

Parts List

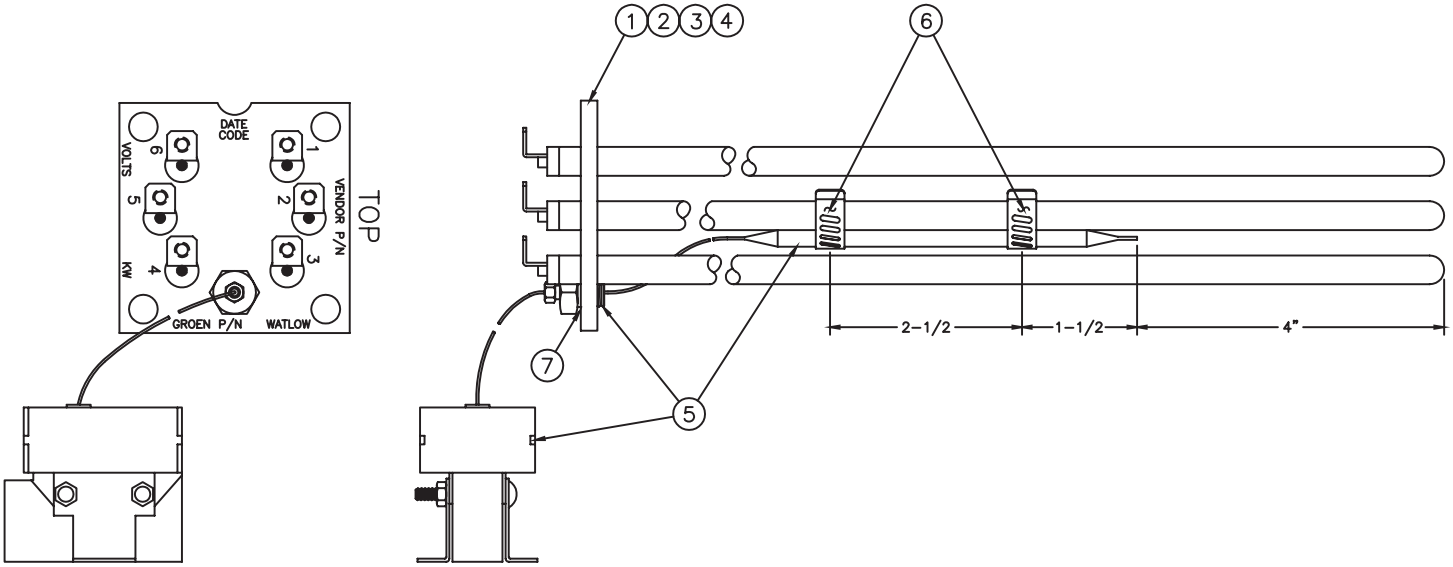

Key	Description	Part #	HY-3E	HY-5E
1	ASSEMBLY, HEATER ELEMENT, 208V, 8KW	141183	X	X
2	ASSEMBLY, HEATER ELEMENT, 240V, 8KW	141184	X	X
3	ASSEMBLY, HEATER ELEMENT, 480V, 8KW	141185	X	X
5	ASSEMBLY, THERMOSTAT	Z094161	X	X
6	CLAMP, HOSE, SS, 1/4 MIN, 25/32 MAX	Z093482	X	X
7	PIPE DOPE	-	X	X

Parts List

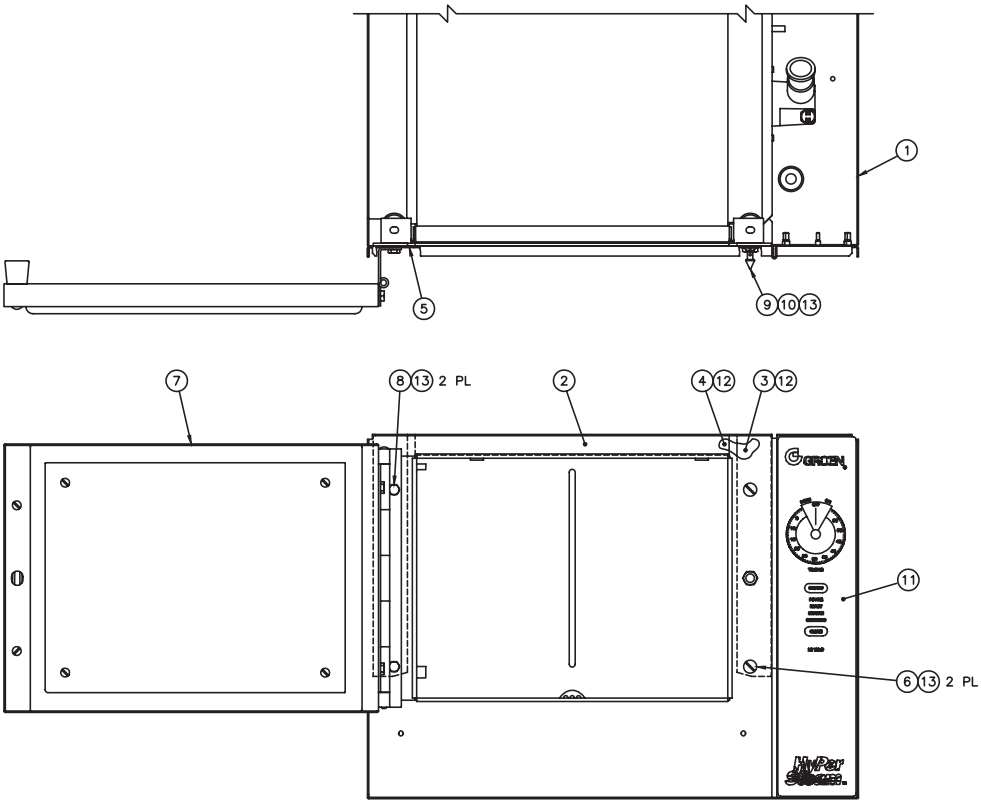

Key	Description	Part #	HY-3E	HY-5E
1	ASSEMBLY, PLATFORM	142416	X	
1	ASSEMBLY, PLATFORM	125967		X
2	PANEL, FRONT, RIGHT SIDE	119802	X	
2	PANEL, FRONT, RIGHT SIDE	125933		X
3	INSULATION LEFT AND RIGHT	Z096845	X	
3	INSULATION, LEFT AND RIGHT	125929		X
4	INSULATION TOP	Z096846	X	X
5	PANEL FRONT, LEFT SIDE	Z094139	X	
5	PANEL FRONT, LEFT SIDE	125947		X
6	SCREW, TRS HD, 1/4-20, 1/2" LONG	Z012700	X	
7	ASSEMBLY, DOOR, 3-PAN	130858	X	
7	ASSEMBLY, DOOR, 5-PAN	125922		X
8	SCREW, CAP, HEX HD, 1/4-20, 1/2" LONG	Z005608	X	
9	PIN, DOOR LATCH	Z078914	X	X
10	NUT, HEX JAM, 5/16-18	Z003823	X	X
11	OVERLAY, FRONT PANEL, HY-3E	123126	X	
11	OVERLAY, FRONT PANEL, HY-5E	123127		X
12	SILICONE, ALUMINUM	-	X	X
13	LOCTITE #242	-	X	X

Parts List

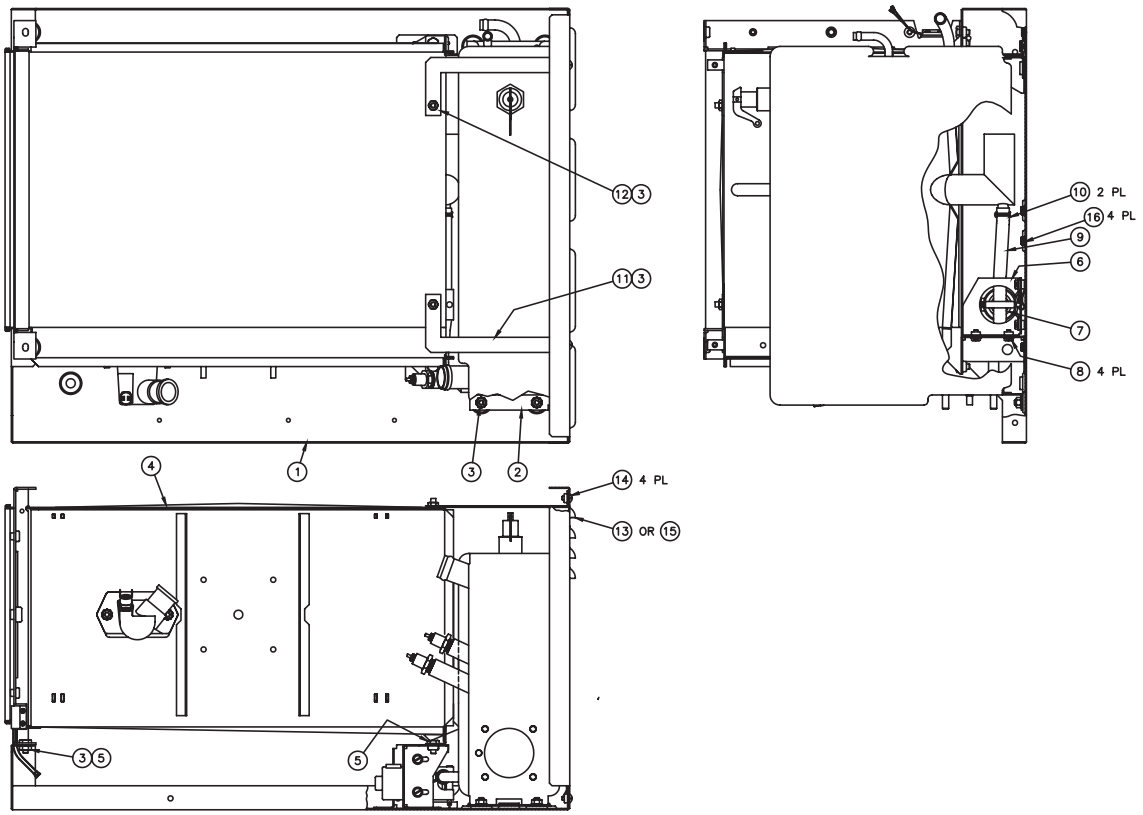

Key	Description	Part #	HY-3E	HY-5E
1	WELDMENT, BASE PAN	142136	X	X
2	ASSEMBLY, STEAM GENERATOR	142417	X	
2	ASSEMBLY, STEAM GENERATOR	142138		X
3	NUT, HEX SERRATED, 1/4-20	NT1101	X	X
4	ASSEMBLY, CAVITY	142436	X	
4	ASSEMBLY, CAVITY	142143		X
5	SCREW, CAP, HEX HD CAP, 1/4-20, 1/2" LONG	Z005608	X	X
6	BRACKET, DRAIN VALVE	Z099991	X	X
7	VALVE, DRAIN, PINCH, 1/2"-INCH ID	Z071234	X	X
8	SCREW, HEX WSHR HD, 10-32, 3/8" LONG	Z069773	X	X
9	TUBING, CLEAR SILICONE, 1/2-INCH ID, 7-1/4" LONG	Z096806	X	X
10	CLAMP, HOSE, DOUBLE WIRE,	127527	X	X
11	BRACKET, REAR SUPPORT (RIGHT)	Z088875R	X	X
12	BRACKER, REAR SUPPORT (LEFT)	Z088875L	X	X
13	COVER, REAR	123114	X	
13	COVER, REAR	125932		X
14	SCREW, TRS HD, 10-32, 3/8" LONG	Z004173	X	X
16	HOLE PLUG, 3/8-INCH, NICKEL PLATED	122223	X	X

Parts List

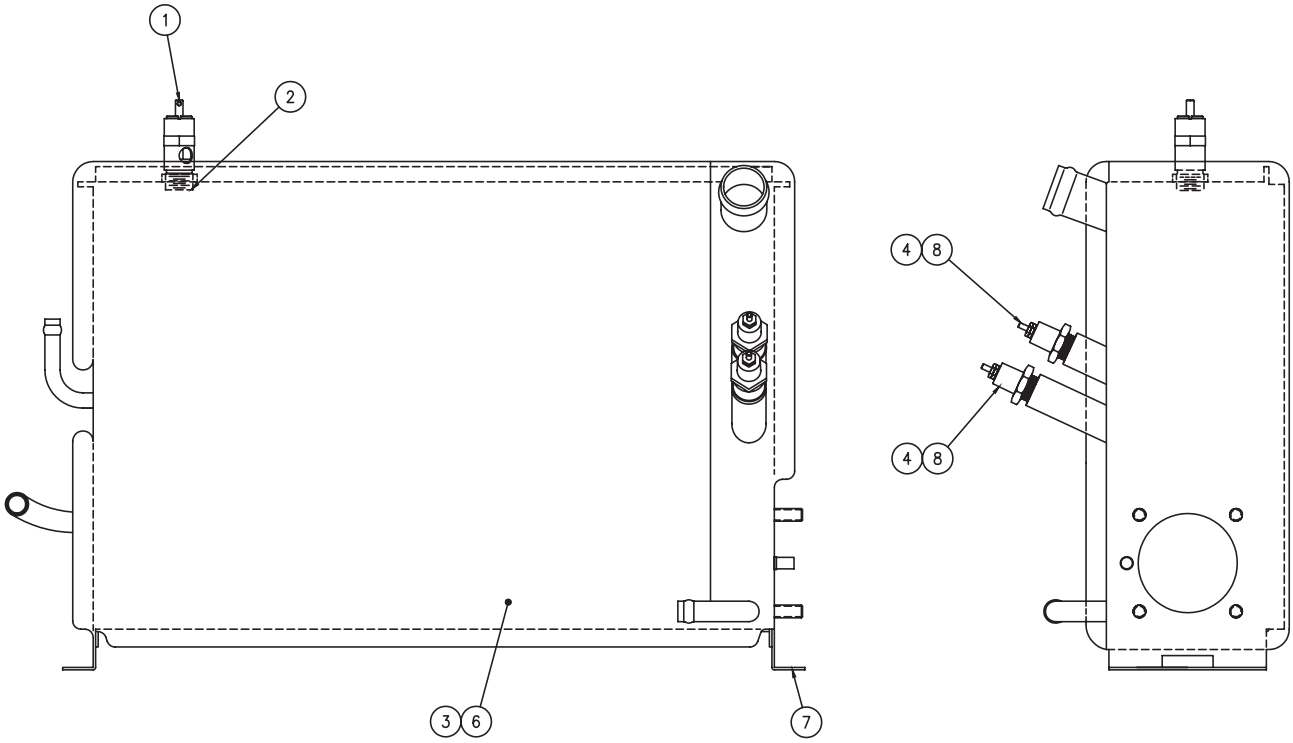

Key	Description	Part #	HY-3E	HY-5E
-	ASSEMBLY, STEAM GENERATOR, SERVICE, HY-3E	123199S	X	
-	ASSEMBLY, STEAM GENERATOR, SERVICE, HY-5E	125938S		X
1	VALVE, PRESSURE RELIEF, 1/2 PSI, 3/8 NPT	140867	X	X
2	TAPE, PIPE THREAD SEALER	-	X	X
3	DUCT TAPE, ALUMINUM FOIL, 3" WIDE	-	X	X
4	PROBE, WATER LEVEL	141424	X	X
6	INSULATION, STEAM GENERATOR, HY-3E	100922	X	
6	INSULATION, STEAM GENERATOR, HY-5E	125937		X
7	WELDMENT, STEAM GENERATOR, HY-3E	142418	X	
7	WELDMENT, STEAM GENERATOR, HY-5E	142139		X
8	PIPE DOPE	-	X	X

Parts List

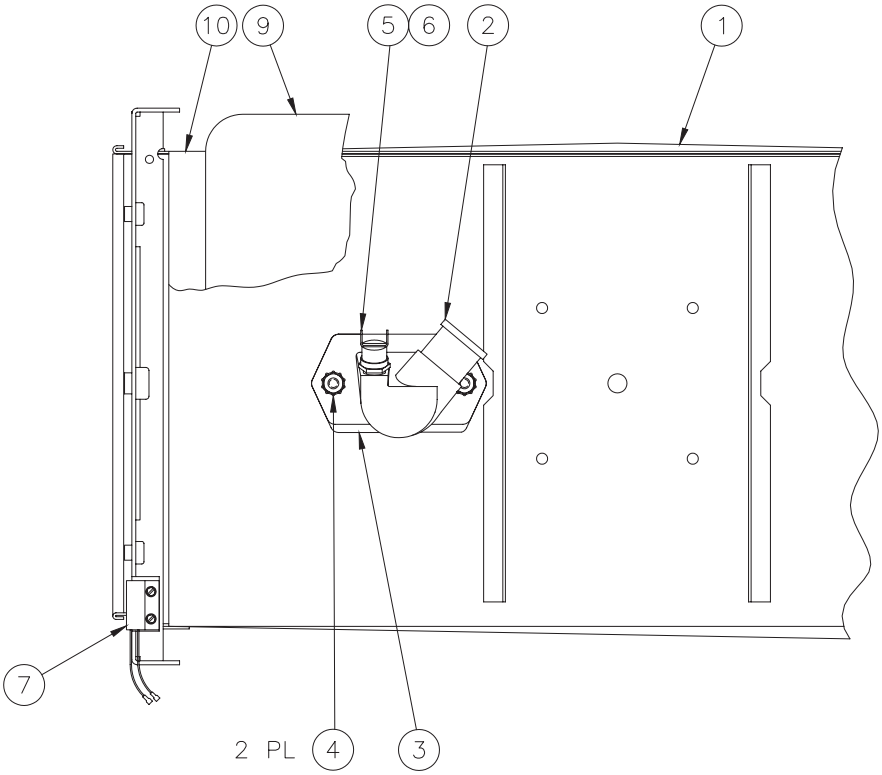

Key	Description	Part #	HY-3E	HY-5E
1	WELDMENT, CAVITY ASSEMBLY, HY-3	Z096825	X	
1	WELDMENT, CAVITY ASSEMBLY, HY-5	125946		X
2	PORT, STEAM INLET	142413	X	
2	PORT, STEAM INLET	141336		X
3	GASKET, STEAM INLET	Z099250	X	X
4	NUT, HEX SERRATED, 1/4-20	NT1101	X	X
5	THERMOSTAT, SENSOR W/STUD, 3/8"	Z088865	X	X
6	HEAT SINK COMPOUND	-	X	X
7	SWITCH, DOOR	Z096857	X	X
8	SCREW, HEX WSHR HD, 4-40, 1/4" LONG	Z096841	X	X
9	INSULATION, CHAMBER	Z096738	X	
9	INSULATION, CHAMBER	125936		X
10	DUCT TAPE, ALUMINUM FOIL, 3" WIDE	-	X	

Parts List

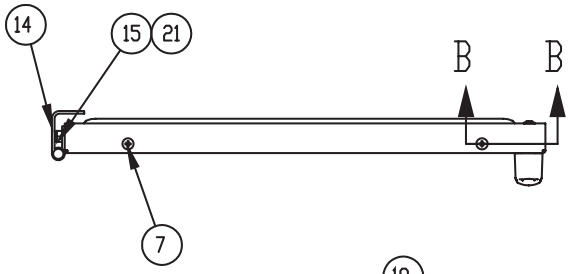

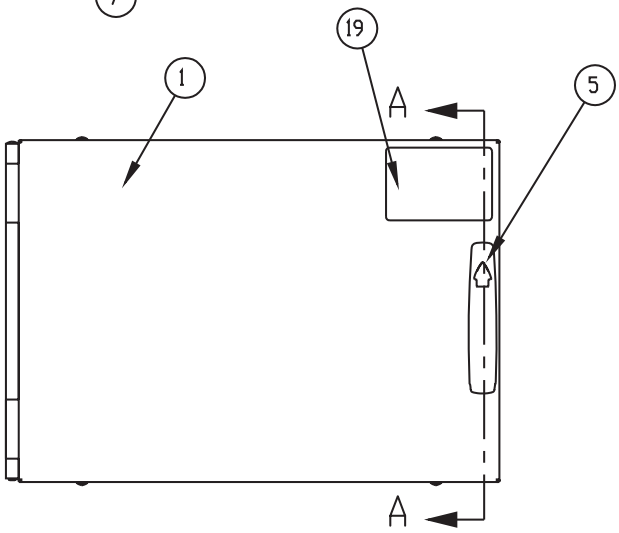

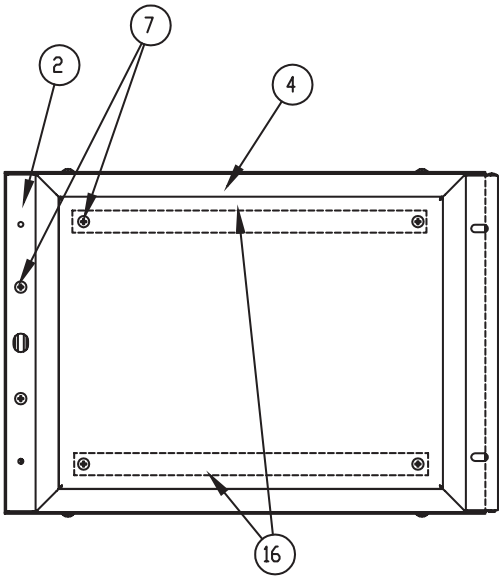

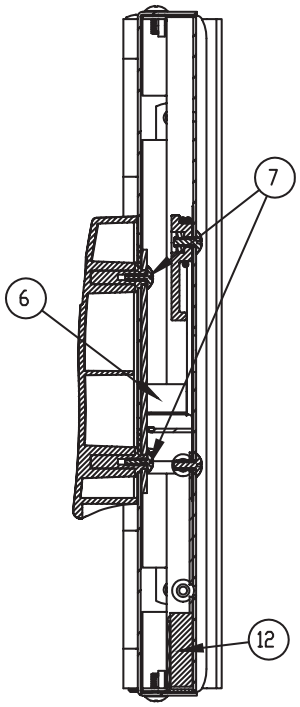

SECTION A-A
SCALE 1 : 2

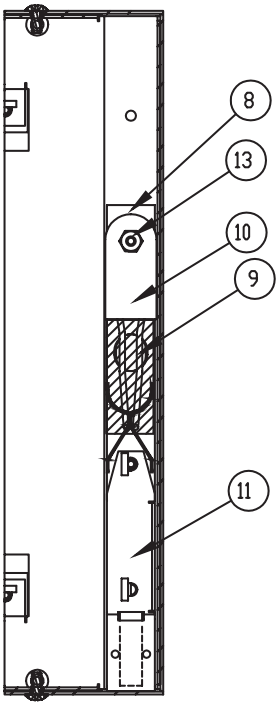

SECTION B-B
SCALE 1 : 2

DOOR ASSEMBLY

Parts List

Key	Description	Part #	HY-3E	HY-5E
1	WELDMENT, DOOR, FRONT PANEL, 3-PAN	130859	X	
1	WELDMENT, DOOR, FRONT PANEL, 5-PAN	125923		X
2	WELDMENT, INSIDE PANEL, 3-PAN	130861	X	
3	PANEL, GASKET RETENTION, 3-PAN	130863	X	
	PANEL, GASKET RETENTION, 5-PAN	125927		X
4	GASKET, DOOR, 3-PAN	124849	X	
4	GASKET, DOOR, 5-PAN	125907		X
5	HANDLE	129723	X	X
6	CAM, DOOR, UNLATCH LIFT	Z074252	X	X
6a	BRACKET, DOOR CAM, LEFT	Z074255	X	X
6b	BRACKET, DOOR CAM, RIGHT	Z074254	X	X
6c	PLATE, BASE, DOOR CAM	Z074253	X	X
7	SCREW, PHILLIPS HD, 8-32, 3/8" LONG	129732	X	X
8	SPACER, DOOR LATCH	130865	X	
8	BRACKET, DOOR LATCH	125925		X
9	SPRING	Z078911	X	X
10	MANDREL, SPRING	130864	X	
10	ROLLER, SPRING	Z078912		X
10	CLIP, SPRING RETAINER	Z081616		X
11	WELDMENT, MAGNET RETENTION	130866	X	
11	SPACER, DOOR LATCH	Z094146		X
12	MAGNET, DOOR	Z069754	X	X
12a	BLOCK, MAGNET MOUNTING	Z069755		X
13	NUT, HEX, 8-32	Z002632	X	
14	HINGE, DOOR, 3-PAN	130868	X	
14	HINGE, DOOR, 5-PAN	125928		X
15	SCREW, CAP, HEX HD, 1/4-20, 1/2" LONG	Z005608	X	X
16	TAPE, SPACER, HY-3, HY-5	138320	X	
17	COMPOUND, LUBRICATING	-	X	X
18	SEALANT, RED, RTV 159	-	X	X
20	SILICONE, ALUMINUM	-	X	X
21	LOCTITE 242	-	X	X
-	BOARD, INSULATION, 5-PAN	125926		X
-	SPACER, INSIDE DOOR PANEL	Z071206		X
-	NUT, HEX KEPS, 10-32	Z071256		X

Parts List

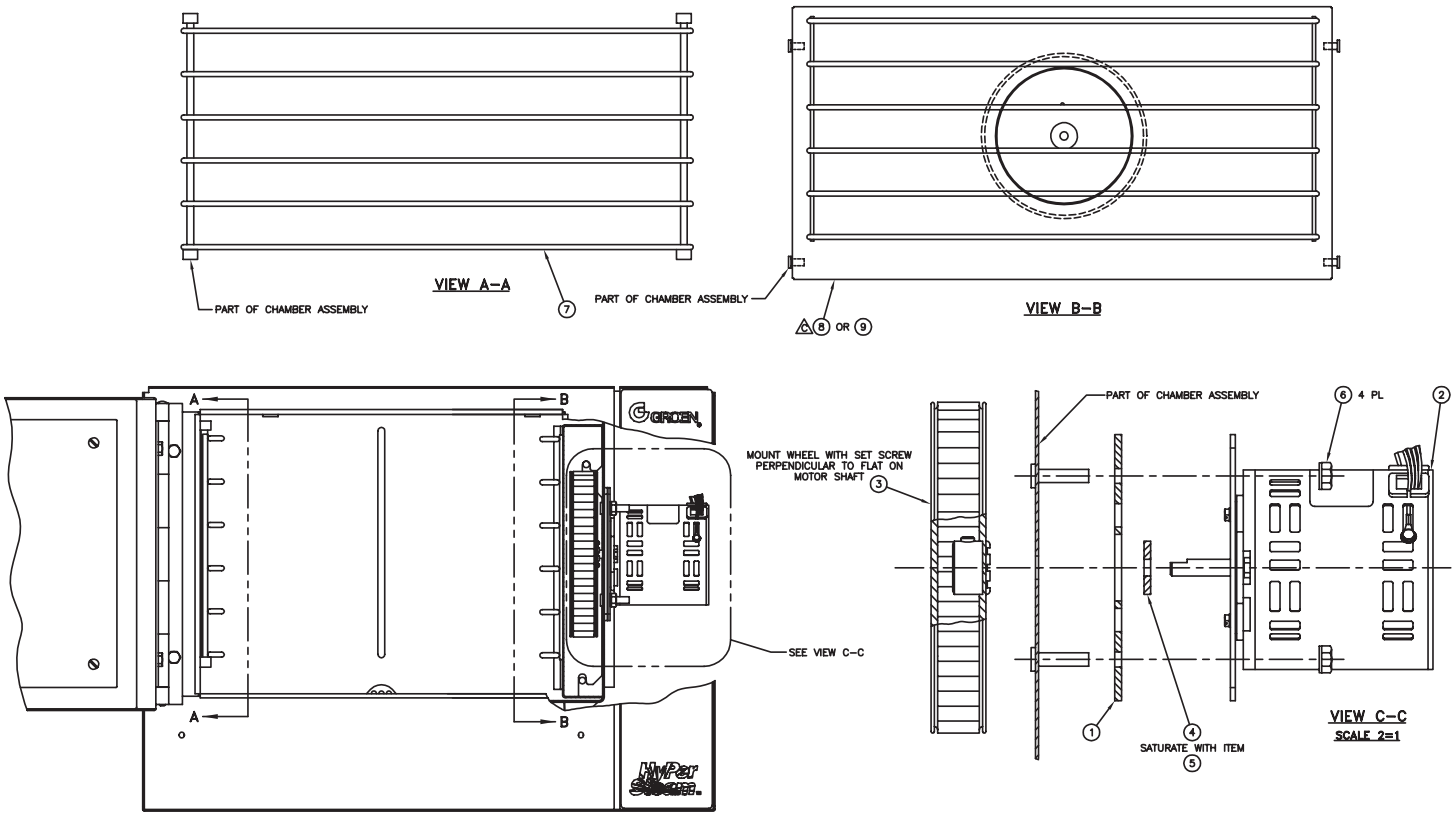

Key	Description	Part #	HY-3E	HY-5E
1	INSULATOR, MOTOR	Z094135	X	X
2	MOTOR, BLOWER	146880	X	X
3	WHEEL, BLOWER	Z096790	X	X
4	SEAL MOTOR	Z096868	X	X
5	LUBRICANT, MOTOR SHAFT SEAL	Z099948	X	X
6	NUT, HEX SERRATED, 1/4-20	NT1101	X	X
7	WIREFORM	NT1869	X	
7	WIREFORM	NT1801		X
8	ASSEMBLY, BLOWER COVER, HY-3	162905	X	
8	ASSEMBLY, BLOWER COVER, HY-5	162915		X

Parts List

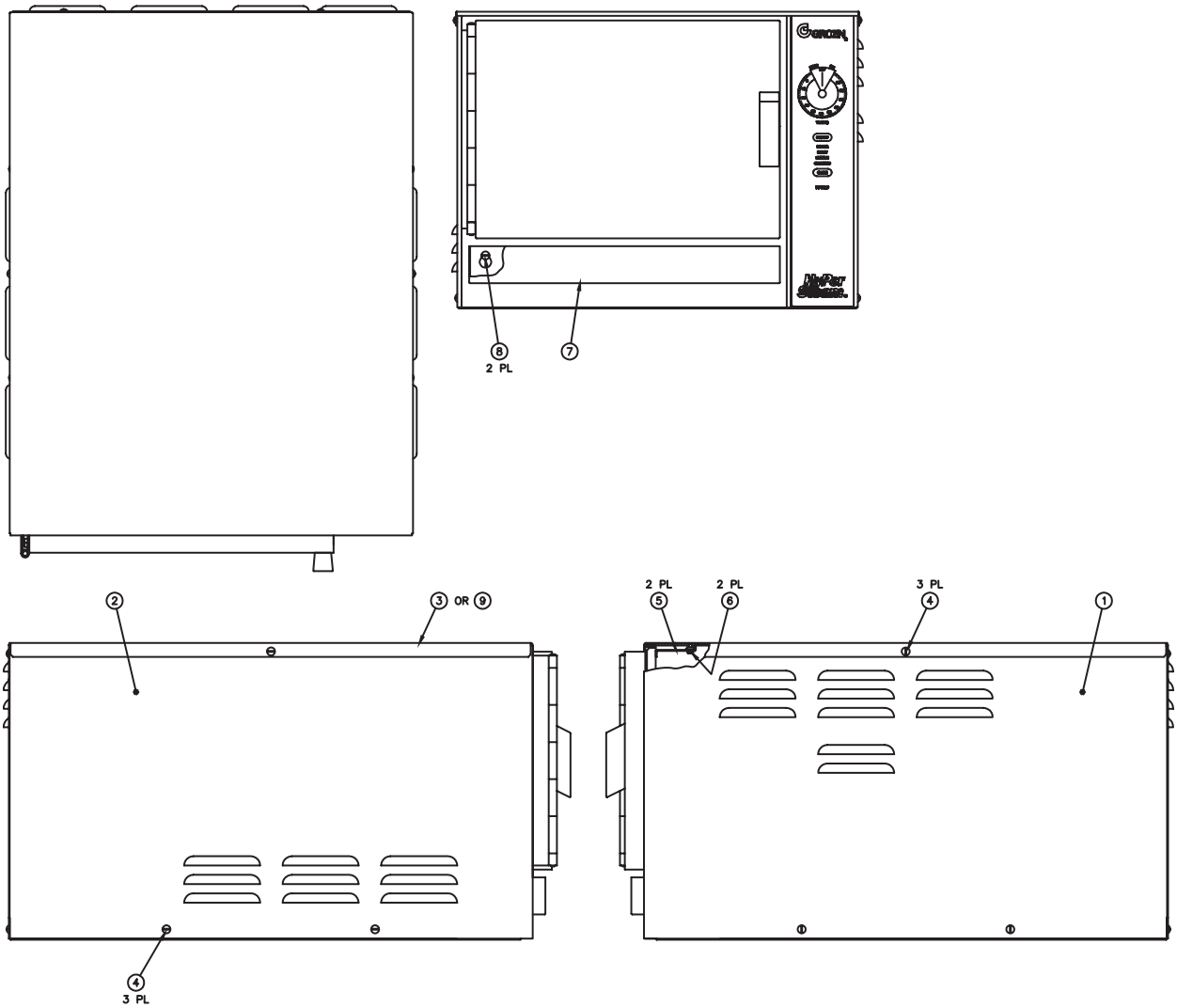

Key	Description	Part #	HY-3E	HY-5E
1	ASSEMBLY, COVER, RIGHT SIDE	141331	X	
1	ASSEMBLY, COVER, RIGHT SIDE	141623		X
2	ASSEMBLY, COVER, LEFT SIDE	141332	X	
2	ASSEMBLY, COVER, LEFT SIDE	141624		X
3	ASSEMBLY, COVER, TOP, SINGLE UNIT	123133	X	X
4	SCREW TRS HD 10-32 X 3/8"	Z004173	X	X
5	BRKT, TOP RETAINER	123156	X	X
6	SCREW HEX SLOTTED HD 8-32X.375	Z069789	X	X
7	TRAY DRIP	Z094151	X	X
8	SHOULDER SCREW - DRIP TRAY	Z070467	X	X
9	ASSEMBLY, COVER, TOP, SINGLE UNIT	REF	X	X
-	ASSEMBLY, COVER, REAR	141333	X	
-	ASSEMBLY, COVER, REAR	141625		X

Parts List

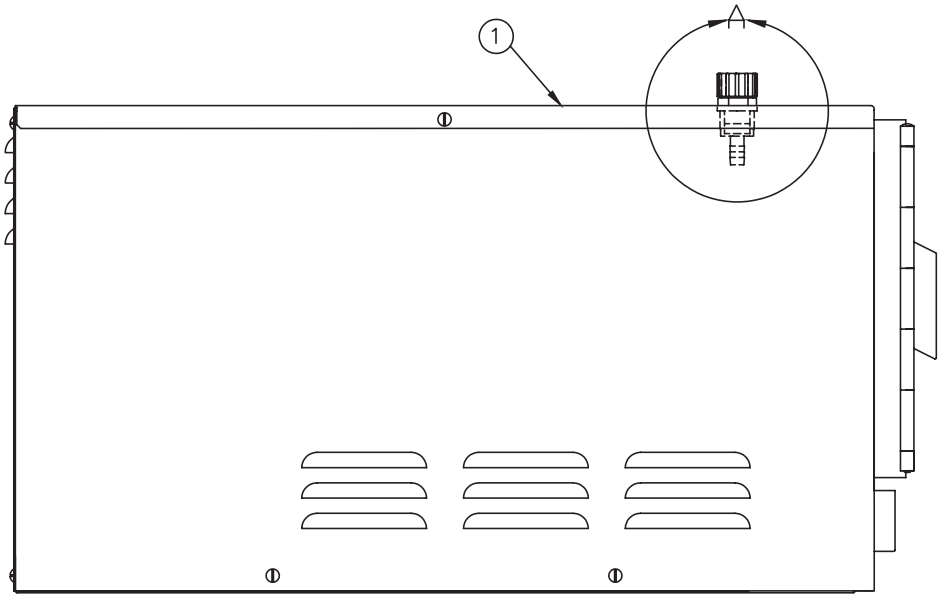

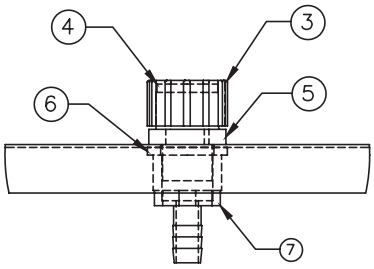

DETAIL A
SCALE 1 : 1

Key	Description	Part #	HY-3E	HY-5E
1	TOP COVER STEAMER ASM, HY-3E	142428	X	X
-	DRAIN KIT, HY-3E	118948	X	
-	DRAIN KIT, HY-5E	120699		X
3	CAP, DELIME TOP	142432	X	X
4	WASHER, HOSE, 3/4"	122143	X	
5	ADAPTER, DELIME, TOP	142433	X	X
6	WASHER, HOSE, 1"	142297	X	
7	ADAPTER, 1/2 NPT TO 1/2 HOSE	142431	X	
7	ADAPTER, 1/2 NPT TO 3/8 BARB	142262		X
-	HOSE, 1/2 ID, 24" LONG	138451	X	
-	HOSE, 3/8 ID, 21" LONG	142268		X
-	CLAMP, DOUBLE WIRE DW-12	127662	X	
-	PLUG, SNAP-IN, POLYETHYLENE, 1"	139000	X	

Parts List

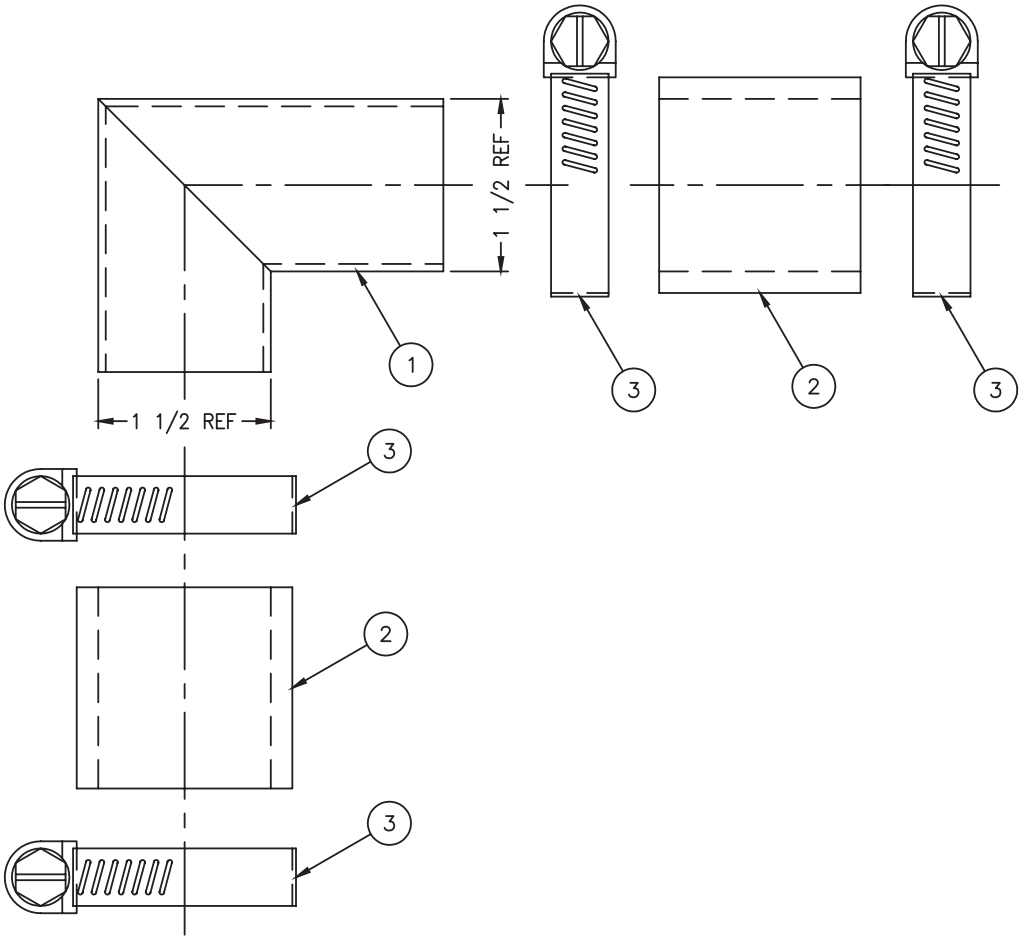

Key	Description	Part #	HY-3E	HY-5E
1	DRAIN ELBOW, 1-1/2 OD	Z092272	X	
1	DRAIN ELBOW, 2 OD	Z092273		X
2	HOSE, DRAIN, 1-1/2 ID, 1-3/4" LONG	112953	X	
2	HOSE, DRAIN, 2 ID, 2" LONG	Z090742		X
3	CLAMP, HOSE, 2-1/4 DIA	Z073259	X	
3	CLAMP, HOSE, 2-1/2 DIA	Z013616		X

Parts List

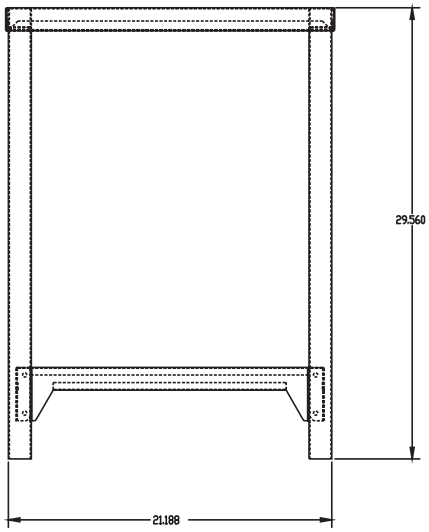

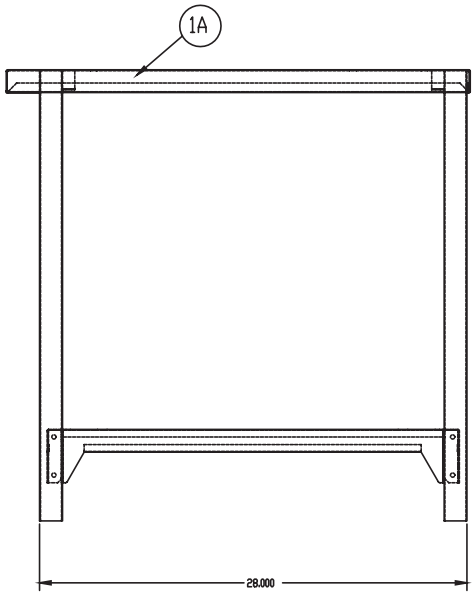

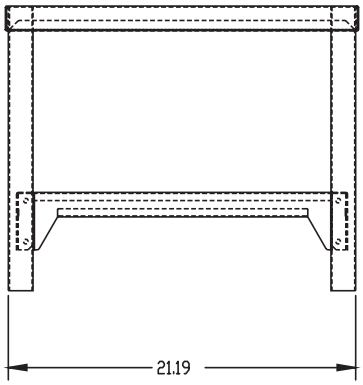

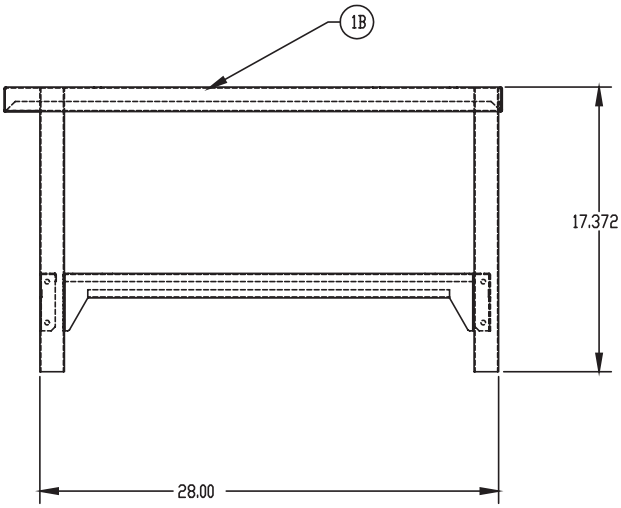

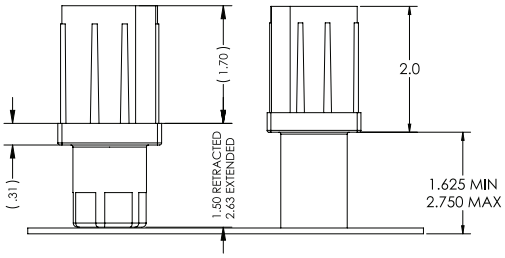

2

3

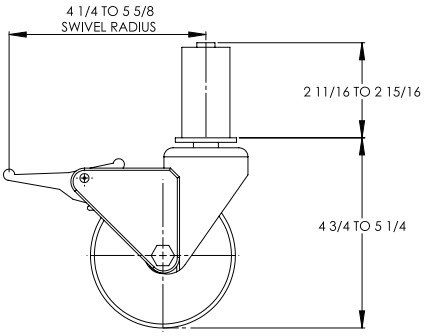

4

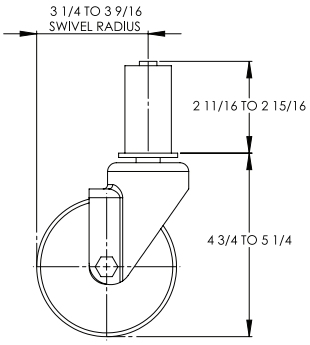

5

6

Parts List

Key	Description	Part #	HY-3E			HY-5E
1A	WELDMENT, STAND, 29-9/16 H, 21-3/16 W, 28 D	143672	X	X	X	
1B	WELDMENT, STAND, 17-3/8 H, 21-3/16 W, 28 D	146005				X
2	INSERT, BULLET FOOT, 1-1/2 TUBE	Z042505	X	X	X	X
3	INSERT, FLANGED FOOT, 1-1/2 TUBE	Z097615	X	X	X	X
4	CASTER, LOCKING, 1-1/2 TUBE	140115	X	X	X	X
5	CASTER, NON-LOCKING, 1-1/2 TUBE	140116	X	X	X	X
6	LEG, 4-INCH, ADJUSTABLE	Z041121	X	X	X	

Parts List

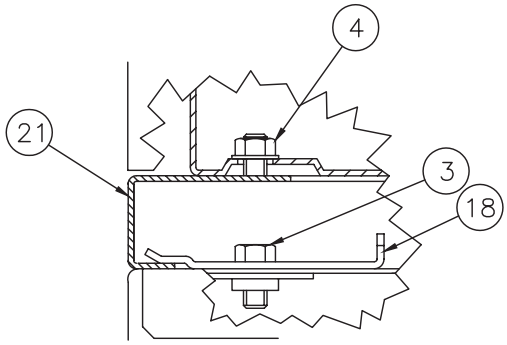

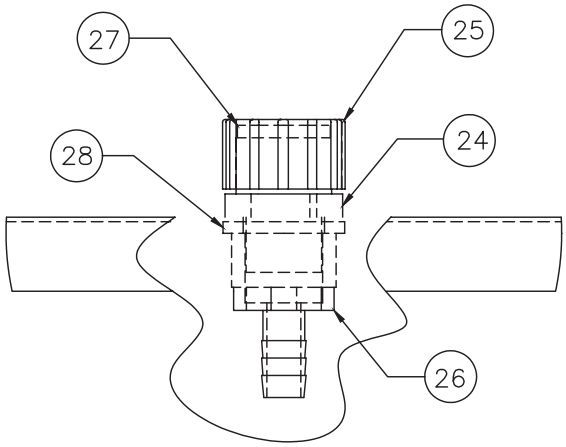

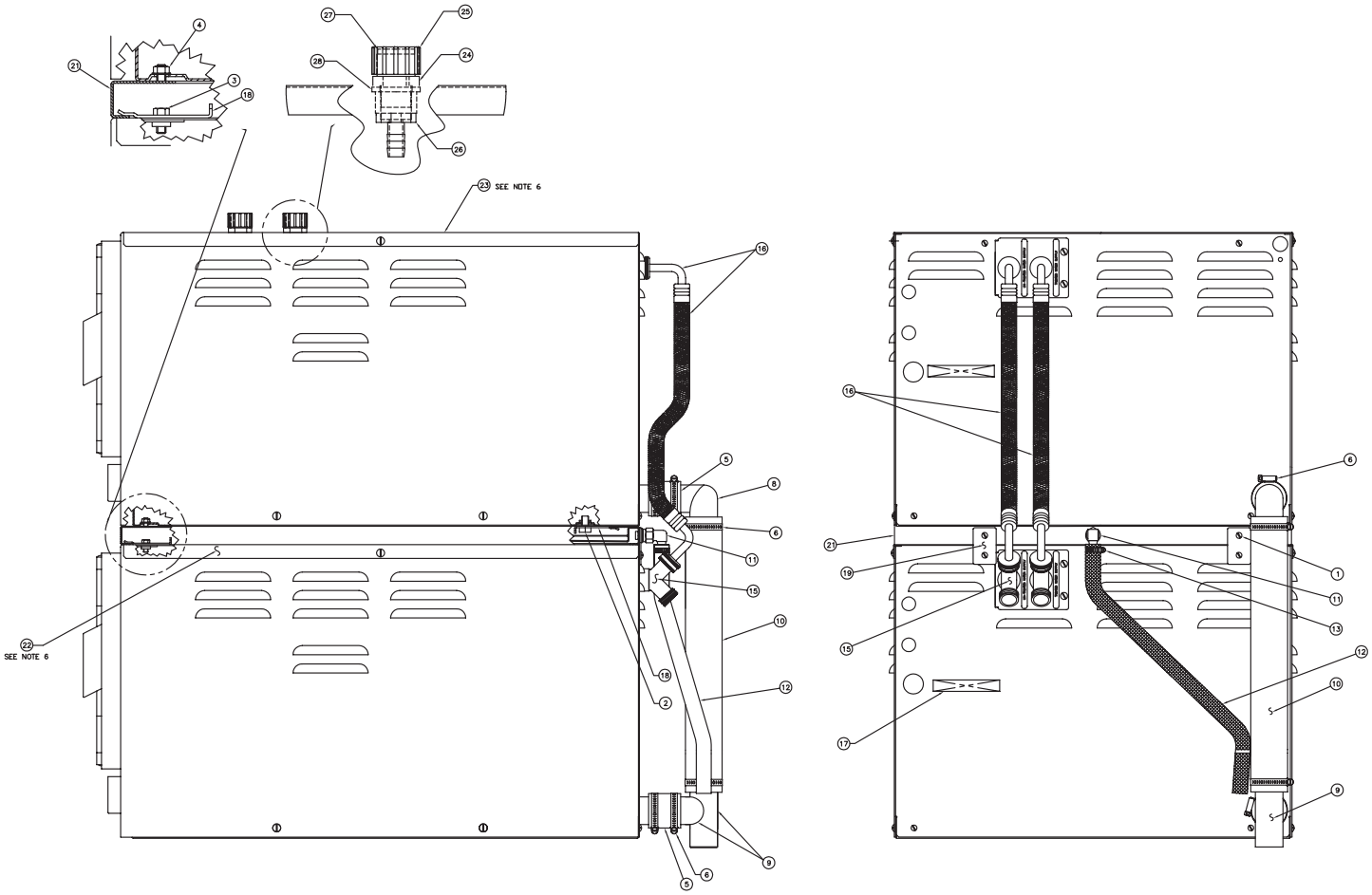

DOUBLE STACKING KIT

Parts List

Key	Description	Part #	HY-3E	HY-5E
1	SCREW TRS HD 10-32 X 3/8"	Z004173	X	X
2	SCREW HEX HEAD CAP, 3/8-16 X 5/8	Z005449	X	X
3	SCREW, HEX HD CAP, 1/4-20, 1/2" LONG	Z005608	X	X
4	NUT,- HEX,SERRATED, 1/4-20	NT1101	X	X
5	HOSE, DRAIN, 1-1/2 ID, 2" LONG	112953	X	
5	HOSE, DRAIN, 2 ID, 2" LONG	Z090742		X
6	CLAMP, HOSE, 2-1/4 DIA	Z073259	X	
6	CLAMP, HOSE, 2-1/2 DIA	Z013616		X
8	DRAIN ELBOW, 1-1/2 OD	Z072159	X	
8	DRAIN ELBOW, 2 OD	Z092273		X
9	DRAIN TEE, 1-1/2 OD	118171	X	
9	DRAIN TEE, 2 OD	126003		X
10	HOSE, SILICONE, REINFORCED, 1-1/2 ID, 15" LONG	122205	X	
10	HOSE, SILICONE, REINFORCED, 2 ID, 21" LONG	126001		X
11	ELBOW, MALE, 3/8 NPT TO 1/2 TUBE	122207	X	X
12	HOSE, RUBBER, 1/2 ID, 18" LONG	122206	X	
12	HOSE, RUBBER, 1/2 ID, 24" LONG	102276C		X
13	CLAMP, HOSE LOW	Z093482	X	X
15	CONNECTOR, HOSE, 2 WAY, 3/4 NGH	101189	X	X
16	HOSE ASSEMBLY,WATER, 3/8 ID, 14-1/2" LONG	101183	X	
16	HOSE ASSEMBLY,WATER, 3/8 ID, 21" LONG	126002		X
17	LABEL, DISCONNECT BEFORE SERVICING	Z074244	X	X
18	BRACKET, "Z"	122211	X	X
19	PLATE, RETENTION	122212	X	X
21	WELDMENT, MOUNTING BRACKET	142444	X	X
22	WELDMENT, DOUBLE STACK TOP	140186	X	X
23	PANEL ASSEMBLY, DOUBLE STACK, TOP	142443	X	X
24	ADAPTER, DELIME, TOP	142433	X	X
25	CAP, DELIME, TOP	142432	X	X
26	ADAPTER, 1/2 NPT TO 1/2 HOSE	142431	X	
26	ADAPTER, 1/2 NPT TO 3/8 BARB	142262		X
27	WASHER, HOSE, 3/4"	122143	X	X
28	WASHER, HOSE, 1"	142297	X	X
-	HOSE, 1/2 ID, 24" LONG [FRONT DELIME PORT]	138451	X	
-	HOSE, 1/2 ID, 43" LONG [REAR DELIME PORT]	106597	X	
-	HOSE, 3/8 ID, 21" LONG [FRONT DELIME PORT]	142268		X
-	HOSE, 3/8 ID, 30" LONG [REAR DELIME PORT]	142269		X
-	LABEL, DELIME PORT LOCATION	142423	X	X
-	CLAMP, HOSE, DOUBLE WIRE, DW-12	127662	X	
-	BUSHING, SNAP, 3/4 ID	Z000453	X	
-	SILICONE ALUMINUM	124793	X	X

Electrical Schematic

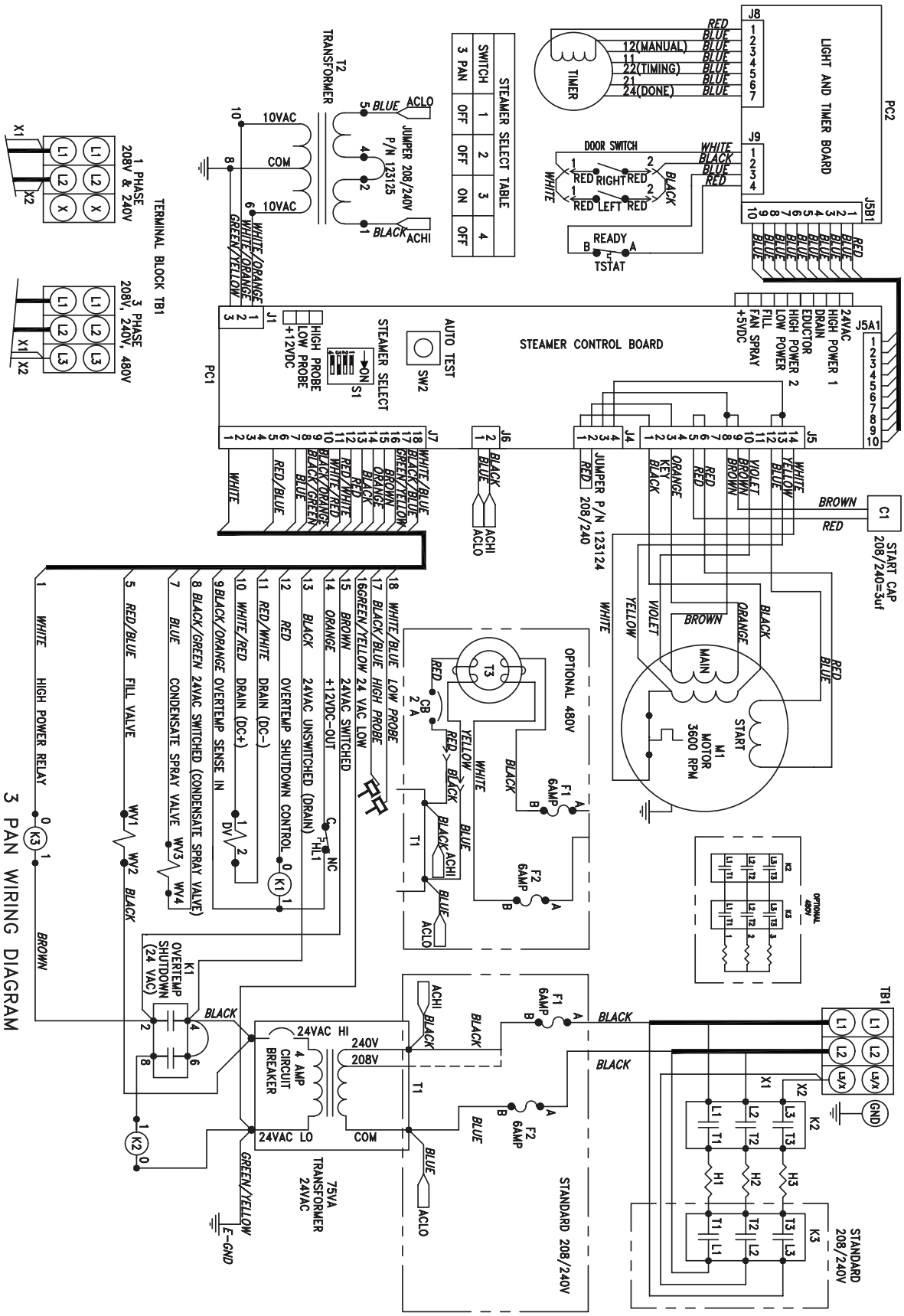

Electrical Schematic

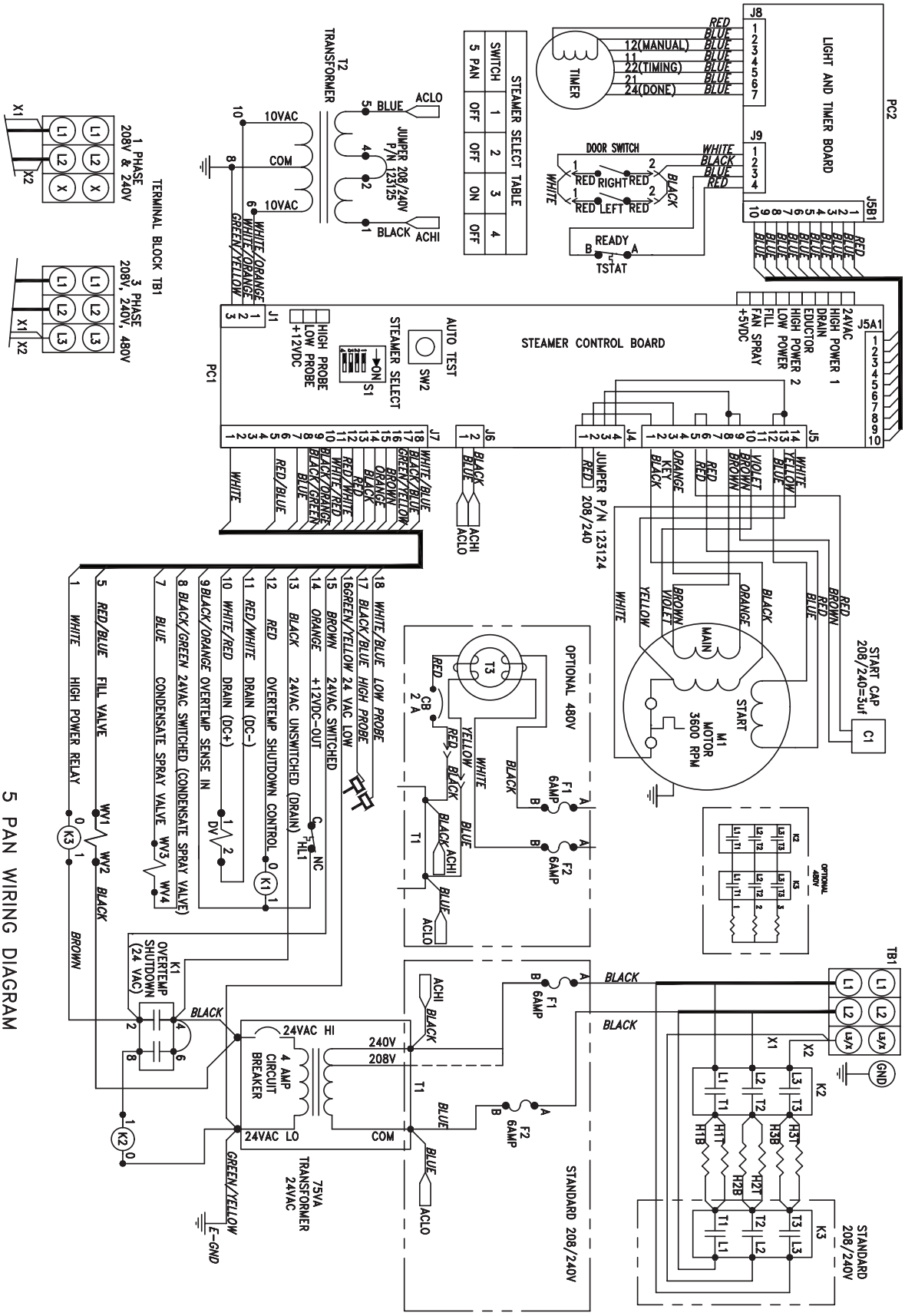

Service Log

Model No:	Purchased From:
Serial No:	Location:
Date Purchased:	Date Installed:
Purchase Order No:	For Service Call:

Date	Maintenance Performed	Performed By